Reg. No. :

Question Paper Code : 30147

B.E./B.Tech. DEGREE EXAMINATIONS, APRIL/MAY 2023.

Third Semester

Electrical and Electronics Engineering

EE 3301 – ELECTROMAGNETIC FIELDS

(Regulations 2021)

Time : Three hours | Maximum : 100 marks

Answer ALL questions.

PART A — (10 × 2 = 20 marks)

1. State Divergence Theorem.

2. State Coulombs law.

3. Define potential difference with equation.

4. Formulate the total equivalent capacitance of two capacitor connected in series.

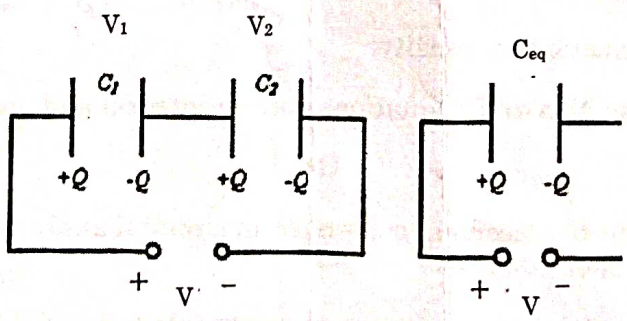

5. List the difference between Scalar and Vector Magnetic Potential.

6. State Ampere's circuital law.

7. Write the faraday's law equation for a moving charge in a constant magnetic field.

8. Write down the expression for electromotive force induced in the moving loop in static field B.

9. List the properties of uniform plane wave.

10. Outline the term 'skin depth'.

PART B — (5 × 13 = 65 marks)

11. (a) Calculate the electric field due to infinite line charge with charge density ρL.

Or

(b) Derive the potential due to

(i) Line charge (4)

(ii) Surface charge (4)

(iii) Volume charge (5)

12. (a) (i) Derive the boundary conditions for electric fields, between conductor and free space. (8)

(ii) Applying stokes theorem, derive continuity equation of current. (5)

Or

(b) (i) Derive the capacitance of a coaxial cable. (7)

(ii) Derive the capacitance of a spherical capacitor. (6)

13. (a) Find the total power passing through a circular disk of radius 5 cm in free space, given $\vec{H} = 0.2\, e^{-j\beta x}\vec{a}_z$.

Or

(b) Given electric field intensity in free space, $\vec{E} = \frac{50}{\rho}\cos(10^8 t - 10z)\vec{a}_\rho V/m$.

Find Magnetic flux density.

14. (a) Derive the Maxwell's equations both in integral and point forms.

Or

(b) Derive the displacement current from circuital analysis and from Ampere circuital law.

15. (a) Illustrate and derive poynting vector in integral and differential form.

Or

(b) Illustrate the propagation of uniform plane waves in two different medias with $(\varepsilon_1, \mu_1, \sigma_1)$ and $(\varepsilon_2, \mu_2, \sigma_2)$. Derive reflection coefficient and transmission coefficient of the wave, from the field components. (7+6)

PART C — (1 × 15 = 15 marks)

16. (a) In a material, for which $\sigma = 5.0 \frac{s}{m}$ and $\varepsilon_r = 1$ and $\vec{E} = 250 \sin 10^{10} t (V/m)$.

Find the conduction and displacement current densities, and the frequency at which both have equal magnitudes. (5+5+5)

Or

(b) If $V = \left[2x^2 y + 20z - \frac{4}{x^2 + y^2} \right]$ volts.

Evaluate $\vec{E}$ and $\vec{D}$ at point P (6,-2.5,3) (8+7)

Reg. No. : | | | | | | | | | | | | |

Question Paper Code : 20974

B.E./B.Tech. DEGREE EXAMINATIONS, NOVEMBER/DECEMBER 2023.

Third Semester

Electrical and Electronics Engineering

EE 3301 – ELECTROMAGNETIC FIELDS

(Regulations – 2021)

Time : Three hours | Maximum : 100 marks

Answer ALL questions.

PART A — (10 × 2 = 20 marks)

1. Define vector field.

2. List two applications of Gauss's law.

3. Write the Poisson's equation.

4. Relate electric field intensity and electric flux density.

5. State Biot-Savarts law.

6. State Amperes circuit law.

7. What is mutual inductance of coils?

8. State Faradays law.

9. What is group velocity?

10. Define skin depth.

PART B — (5 × 13 = 65 marks)

11. (a) Determine the divergence of the vector field. $\vec{P} = x^2 yz\vec{a}_x + xz\vec{a}_z$. (13)

Or

(b) Given the two points $A\ (x = 5, y = 7, z = 3)$ and $B = (r = 6, \theta = 40°, \varphi = 220°)$. Find

(i) Spherical co-ordinate of A. (7)

(ii) Cartesian co-ordinate of B. (6)

12. (a) A cylindrical capacitor consists of an inner conductor of radius 'a' and an outer conductor, whose inner radius is 'b'. The space between the conductors is filled with a dielectric permittivity ε_r and length of the capacitor is L. Find the value of the capacitance. (13)

Or

(b) If $V = x - y + xy + 4z\ V$, Find

(i) E at (4,4,4) (7)

(ii) Energy stored in a cube of side 1 m centered at the origin. (6)

13. (a) Derive the boundary conditions, for the EM wave in magnetic field to travel between two different mediums. (13)

Or

(b) Derive the magnetic field intensity at a point P due to a finite straight conductor, carrying a current I. (13)

14. (a) Derive displacement current from circuital analysis and from Ampere circuital law. (13)

Or

(b) Derive and explain Maxwell's equations both in integral and point forms. (13)

15. (a) Derive pointing vector in integral and point form from Maxwell's equation. (13)

Or

(b) Derive wave equation and explain the properties of uniform plane waves in free space. (13)

PART C — (1 × 15 = 15 marks)

16. (a) Find the total charge inside a volume having charge density as $10\, z^2 e^{-0.1x} \sin \pi y\ C/m^3$. The volume is defined between $-2 \le x \le 2$, $0 \le y \le 1$ and $3 \le z \le 4$. (15)

Or

(b) Determine, whether the following potential fields satisfy the Laplace's equations:

(i) $V = x^2 - y^2 + z^2$ (5)

(ii) $V = r \cos \varphi + z$ (5)

(iii) $V = r \cos \theta + \varphi$ (5)

Reg. No. : | | | | | | | | | | | | |

Question Paper Code : 70089

B.E./B.Tech. DEGREE EXAMINATIONS, NOVEMBER/DECEMBER 2022.

Third Semester

Electrical and Electronics Engineering

EE 3301 – ELECTROMAGNETIC FIELDS

(Regulations 2021)

Time : Three hours | Maximum : 100 marks

Answer ALL questions.

PART A — (10 × 2 = 20 marks)

1. Given point $P(-2,6,3)$ find P in cylindrical and spherical coordinates.

2. Given vectors $A = 3a_x + 4a_y + a_z$ and $B = 2a_y - 5a_z$, find the angle between A and B.

3. State Poisson's equations and Laplace equations.

4. If the electric field intensity is given by $E = (Xu_x + Yu_y + Zu_z)$ volt/m, Find the potential difference between $X(2,0,0)$ and $Y(1,2,3)$.

5. State the boundary conditions between two magnetic material.

6. Given that the magnetic vector potential $A = (\sin 2\varphi)a_\varphi$ in cylindrical co-ordinates. Find the flux density at $(2, \pi/4, 0)$.

7. Determine the maximum torque on 80 turn rectangular coil of $0.25\,m \times 0.4\,m$, carrying a current of 10 A in a field of 0.8 Tesla.

8. State Faradays law.

9. State Pointing vector and write its significance.

10. Define intrinsic impedance and estimate its value for free space.

PART B — (5 × 13 = 65 marks)

11. (a) A positive charge of $3\times10^{-3}C$ located at $P_1(3,-2,-4)$m and negative charge of $5\times10^{-6}C$ is located at $P_2(1,-4,3)$m. find (i) vector force on negative charge (ii) Magnitude of force on charge at P_1.

Or

(b) Find the electric field intensity at a point P located at (0,0,h)m due to charge of surface charge density σ C/m² uniformly distributed over the circular disc $r \le a, z = 0$ m and correlate your result by applying gauss's law.

12. (a) A total charge of 25nC is distributed around a circular ring of radius 2.5 m with its center located at the origin and lying in xy plane. Find the potential at $(0,0,5)m$.

Or

(b) Four equal point charges, 100 μC each are located at the corners of a square of 10 cm side in XY plane. Determine the value of fifth charge, which when placed at Centre of the square. Keep all the four equal charges at their respective equilibrium position. The medium is free space.

13. (a) Two long straight parallel wires in air 2m apart carry currents I_1 and I_2 in the same direction. The magnetic field intensity at midway is 7.5 AT/m. If the force on each wire per unit length is 2.5×10^{-4} N, estimate the currents I_1 and I_2.

Or

(b) State Biot-Savart Law. Deduce the expression for the magnetic field at a point on the axis of a current carrying circular loop of radii is 'R' distant 'X' from the center.

14. (a) Develop Maxwell's equations in Integral and Differential forms time varying fields.

Or

(b) Examine whether the following fields satisfy Maxwell's equations or not. $E = [E_m \sin x \, Sin\, t \, a_y]$ and $H = [(E_m / \mu 0) Cos\, x \cos t \, a_z]$.

15. (a) Develop the wave equations from Maxwell's equations for lossy dielectric materials.

Or

(b) Derive the propagation constant for waves in lossless dielectric materials.

PART C — (1 × 15 = 15 marks)

16. (a) Convert the points $P(1,3,5), T(0,-4,3)$ and $S = (-4,-3,-10)$ from Cartesian to cylindrical and spherical coordinate systems. Then transform the vector $\bar{Q} = \frac{\sqrt{x^2+y^2}}{x^2+y^2+z^2}\bar{a}_x - \frac{yz}{x^2+y^2+z^2}\bar{a}_y$ and Evaluate $\bar{Q}$ at T in all the coordinates.

Or

(b) Deduce the expression for the capacitance of parallel plate capacitor having two dielectric media and the capacitor of type specified about as the following details A = 1 t_1 = 0.008, t_2 = 0.003, $\varepsilon_1 = 6\ \varepsilon_0, \varepsilon_2 = \varepsilon_0$. Calculate capacitance at the system. If voltage of 6000 volt is applied across the capacitor determine the potential gradient in two dielectrics.

Reg. No. : | | | | | | | | | | | | |

Question Paper Code : 40486

B.E./B.Tech. DEGREE EXAMINATIONS, NOVEMBER/DECEMBER 2021.

Third/Seventh Semester

Electrical and Electronics Engineering

EE 8391 — ELECTROMAGNETIC THEORY

(Common to : Electronics and Instrumentation Engineering/Instrumentation and Control Engineering)

(Regulations 2017)

Time : Three hours | Maximum : 100 marks

Answer ALL questions.

PART A — (10 × 2 = 20 marks)

1. What is the physical significance of div D?

2. Define electric field intensity.

3. Why water has much greater dielectric constant than mica?

4. What are the significant differences between Poisson's and Laplace's equations?

5. State Gauss law for magnetic field.

6. Write down the magnetic boundary conditions.

7. State the principle of superposition of fields.

8. What is the significance of displacement current?

9. Mention the properties of uniform plane wave.

10. Define intrinsic impedance.

PART B — (5 × 13 = 65 marks)

11. (a) (i) Verify that vector field $\overline{A} = yz\overline{a_x} + zx\overline{a_y} + xy\overline{a_z}$ is irrotational and solenoidal. (6)

(ii) Find the divergence and curl of the following function : $\overline{A} = 2xy\overline{a_x} + x^2z\overline{a_y} + z^3\overline{a_z}$. (7)

Or

(b) (i) Calculate the field intensity at a point on a sphere of radius 3 m, if a positive charge of 2μC is placed at the origin of the sphere. (6)

(ii) Show that the divergence of flux density due to point charge and uniform line charge is zero. (7)

12. (a) A total charge of 10^{-8} C is distributed uniformly along a ring of radius 5 m. Calculate the potential on the axis of the ring at a point 5 m from the centre of the ring. If the same charge is uniformly distributed on a disc of 5 m radius, what will be the potential on its axis at 5 m from the centre? (13)

Or

(b) Find the capacitance of (i) Co-Axial Cable (ii) Spherical Capacitor. (13)

13. (a) Find Magnetic field intensity $\overline{H}$, due to a straight conductor of finite length. (13)

Or

(b) Write about the following: (i) Laplace's Equation for scalar magnetic potential, (ii) Vector Magnetic Potential, (iii) Poisson's equation for magnetic field. (5 + 3 + 5)

14. (a) The circular loop conductor having a radius of 0.15 m is placed in X-Y plane. This loop consists of a resistance of 20 Ω as shown in the fig. If the magnetic flux density is $\overline{B} = 0.5(\sin 10^3)t\overline{a_z}T$. Find current flowing through this loop. (13)

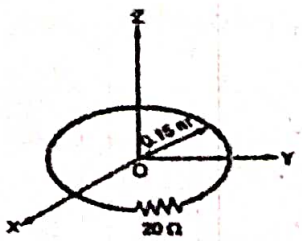

Or

(b) Two parallel conducting plates of area 0.05 m^2 are separated by 2 mm of a lossy dielectric for which $\varepsilon_r = 8.3$ and $\sigma = 8 \times 10^{-4}$ S/m. Given an applied voltage $v = 10 \sin 10^7 t$ V. Find total rms current. [13]

15. (a) Derive a wave equation for non dissipative medium making use of Maxwell equations and field vectors E and H. (13)

Or

(b) The electric field of a plane electromagnetic wave is given $\overline{E}(z,t) = E_0 \cos(kz - \omega t)\hat{i}$. Find the following quantities: (i) The direction of wave propagation. (ii) The corresponding magnetic field $\overline{B}$. (13)

PART C — (1 × 15 = 15 marks)

16. (a) (i) For a parallel plate capacitor A = 120 cm^2, d = 5 mm and $\varepsilon_r = 12$. (1) Calculate the capacitance, (2) After connecting a 40V battery across the capacitor, calculate E,D,Q and the total stored energy, (3) The source is now removed and the dielectric is carefully withdrawn from between the plates. Again calculate E, D, Q and the energy, (4) What is voltage between the plates? (8)

(ii) Find the capacitance of the system shown if length of the plate is 'L' meter. (7)

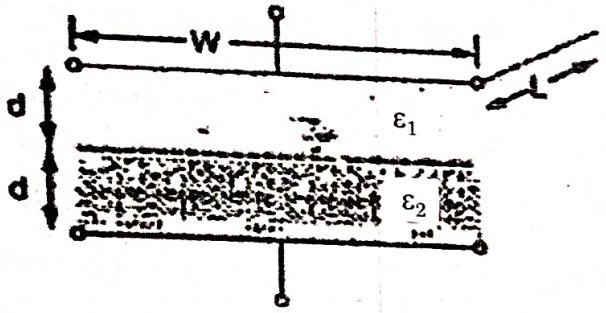

Or

(b) Calculate the internal and external inductances per unit length of a transmission line consisting of two long parallel conducting wires of radius 's' that carry currents in opposite directions. The axes of the wires are separated by a distance d, which is much larger than a. (15)

Reg. No. : | | | | | | | | | | | | |

Question Paper Code : 86591

B.E./B.Tech. DEGREE EXAMINATIONS, NOVEMBER/DECEMBER 2021.

Third Semester

Electrical and Electronics Engineering

EE 1201 A — ELECTROMAGNETIC THEORY

(Regulations 2008)

Time : Three hours | Maximum : 100 marks

Answer ALL questions.

PART A — (10 × 2 = 20 marks)

1. State the Stoke's theorem.

2. Obtain in the cylindrical co-ordinate system the gradient of the function.

   $f(r, \theta, z) = 5r^4 z^4 \sin\theta + \cos\theta + z^2$.

3. Define electric Potential and potential difference.

4. A parallel plate capacitor has a charge of 10^{-3} on each plate while the Potential difference between the plates is 1000 V. Calculate the value of capacitance.

5. What is the total force acting on a moving charge Q in the presence of both electric and magnetic folds?

6. A coil has a self inductance of 1 Henry and a resistance of 4Q. If it is connected to a 40 V DC supply, estimate the energy stored in the magnetic field when the current has attained the final steady value.

7. A conductor of 1 m length is moved with a velocity of 100 m/sec. perpendicular to a field of 1 Tesla. What is the value of emf induced?

8. What is the significance of displacement current?

9. Define Propagation constant.

10. What is skin depth?

PART B — (5 × 16 = 80 marks)

11. (a) (i) Give the physical meaning of Gradient, Divergence and Curl. (8)

(ii) State and prove Divergence theorem. (8)

Or

(b) (i) How are electromagnetic fields caused? What are its sources? What are the effects of electromagnetic fields? (8)

(ii) Why is there a need for different co-ordinate systems ? Describe any two co-ordinate systems normally used in Electromagnetic theory. (8)

12. (a) (i) State and explain Coulomb's law and deduce the vector form of force equation between two point charges. (6)

(ii) At an interface separating dielectric $1(\varepsilon_{r1})$ and dielectric $2(\varepsilon_{r2})$, show that the tangential component of E is continuous across the boundary, whereas the normal component of E is discontinuous at the boundary. (10)

Or

(b) (i) A circular disc of radius 'a' m is charged uniformly with a charge density of $\rho_s C/m^2$. Find the electric potential at a point P distant 'h' m from the disc surface along its axis. (8)

(ii) Find the value of capacitance of a capacitor consisting of two parallel metal plates 30 cm × 30 cm surface area, separated by 5 mm in air. What is the total energy stored by the capacitor if the capacitor is charged to a potential difference of 1000 V? What is the energy density? (8)

13. (a) State and explain Amper's circuital law and show that the field strength at the end of a Tong solenoid is one half of that at the centre. (16)

Or

(b) (i) State and explain Biot-Savart's law. (6)

(ii) Derive an expression for the force between two long straight parallel current carrying conductors. (10)

14. (a) (i) Explain briefly about Transformer and Motional EMFs'. (6)

(ii) By applying field theory to a RLC parallel circuit excited by an alternating current source of 'I' ampere, show that

$$I = \frac{V}{R} + \frac{1}{L}\int V dt + C\frac{dV}{dt}$$

Where, V = voltage across parallel combination R = resistance of resistor, L = inductance of inductor, C = capacitance of capacitor. (10)

Or

(b) Write down and explain the Maxwell's equations in integral and differential forms for the following cases: (8+8)

(i) General case

(ii) Free space

(iii) Harmonic variation

(iv) Static case

(v) Steady case

15. (a) (i) A transmission line having a characteristic impedance of 75 Ω is terminated in an impedance of 200 + j200 Ω. If the line is 2.1 λ long and lossless, determine its input impedance. (6)

(ii) A co-axial line has an inner conductor of radius 0.1cm and an inductance of 0.5 μH/m. Find the values of the characteristic impedance, capacitance and the radius of the outer conductor of the line at 100 MHz, if the dielectric constant of the sponge material used as insulation in between the inner and outer conductor is 3. Calculate the velocity of the propagation and wavelength and phase constant in this case. (10)

Or

(b) Derive the expression for an intrinsic impedance, propagation constant and velocity of a Plane Electromagnetic wave when propagated in

(i) A perfect medium. (8)

(ii) Conducting media and good conductor. (8)

Reg. No. : | | | | | | | | | | | | |

Question Paper Code : X 10393

B.E./B.Tech. DEGREE EXAMINATIONS, NOVEMBER/DECEMBER 2020

Third/Seventh Semester

Electrical and Electronics Engineering

EE 8391 – ELECTROMAGNETIC THEORY

(Common to Electronics and Instrumentation Engineering / Instrumentation and control Engineering)

(Regulations 2017)

Time : Three Hours | Maximum : 100 Marks

Answer ALL questions

PART – A (10×2=20 Marks)

1. State the properties of Divergence of Vector Field.
2. A charge is distributed on x axis of Cartesian system having a line charge density of $3x^2 \mu C/m$. Find the total charge over a length of 10m.
3. A point charge Q = 0.4 nC is located at the origin. Obtain the absolute potential at A (2, 2, 3).
4. Find the Polarization in dielectric material with $\epsilon_r = 2.8$ if $D = 3\times10^{-7} C/m^2$.
5. What is energy density in magnetic field and write its expression.
6. Write the Laplace's equation for scalar magnetic potential.
7. State Maxwell's Third equation.
8. State point form of Ohm's law.
9. Mention the properties of uniform plane wave.
10. Define intrinsic impedance or characteristic impedance of a medium.

PART – B (5×13=65 Marks)

11. a) i) Find the divergence of curl of the following function : $\overline{A} = 2xy\overline{a}_x + x^2z\overline{a}_y + z^3\overline{a}_z$. (5)

ii) Express the field $\overline{E} = \frac{A}{r^2}\overline{a}_r$ in rectangular components and cylindrical components. (8)

(OR)

X 10393

b) i) Three point charges each 10μC are placed in free space at the points (1, 0, 0), (–1, 0, 0) and (0, –1, 0) m respectively. Determine the force on a point charge of 30μC located at (0, 0, 1) m. (7)

ii) A sphere of radius 2 cm is having volume charge density of ρ_v given by $\rho_v = \cos^2\theta$. Find the total charge Q contained in the sphere. (6)

12. a) A total charge of 10^{-8}C is distributed uniformly along a ring of radius 5 m. Calculate the potential on the axis of the ring at a point 5 m from the centre of the ring. If the same charge is uniformly distributed on the disc of 5 m radius, what will be the potential on its axis at 5 m from the centre ?

(OR)

b) Derive the Boundary conditions between conductor and free space of electric field intensity and electric flux density.

13. a) Find the magnetic field intensity $\bar{H}$ due to straight Conductor of finite length carrying current of 'I' amperes.

(OR)

b) Find out the magnetic vector potential in the vicinity of a very long straight wire carrying 'I' amperes. Hence find the magnetic flux density and magnetic field strength.

14. a) i) If the magnetic field $\bar{H} = [3x\cos\beta + 6y\sin\alpha]\bar{a}_z$ A/m, find current density $\bar{J}$ if fields are invariant with time. (5)

ii) An area of 0.65m^2 in the plane z = 0 encloses a filamentary conductor.

Find the induced voltage if, $\bar{B} = 0.05 \cos 10^3 t \left\langle \frac{\bar{a}_y + \bar{a}_z}{\sqrt{2}} \right\rangle$ Tesla. (8)

(OR)

b) A loop shown in the figure is inside a Uniform magnetic field $B = 50\bar{a}_x$ mWb/m^2. If side DC of the loop cuts flux lines at frequency of 50 Hz and the loop lies in the y-z plane at t = 0, find

i) The induced e.m.f. at t = 1 ms. (7)

ii) The induced current at t = 3 ms. (6)

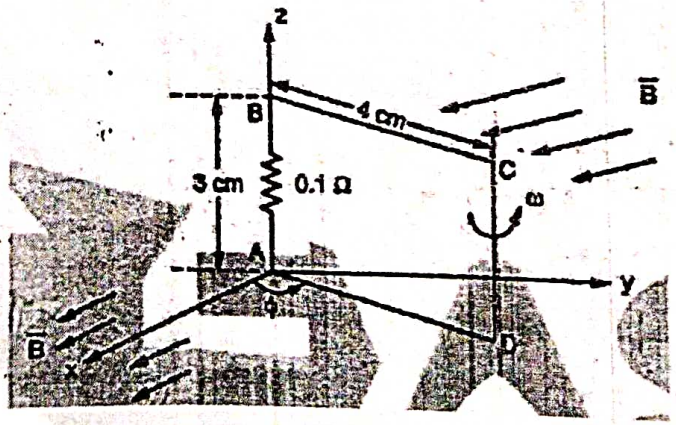

15. a) Derive and summarize the equations which describe propagation of uniform plane waves in free space.

(OR)

b) Derive and summarize the equations which describe propagation of uniform plane waves in lossy dielectric medium.

PART – C (1×15=15 Marks)

16. a) An electrostatic field is given by, $\overline{E} = -8xy\overline{a}_x - 4x^2\overline{a}_y + \overline{a}_z$ V/m. A charge of 6C is to be moved from B (1, 8, 5) to A (2, 18, 6). Find the work done in each of the following cases :

i) The path selected is $y = 3x^2 + z$, $z = x + 4$. (5)

ii) The straight line from B to A. (5)

iii) Show that the work done remains the same and is independent of the path selected. (5)

(OR)

b) Do the fields $\overline{E} = E_m \sin x \sin t\,\overline{a}_y$ and $\overline{H} = \frac{E_m}{\mu_0} \cos x \cos t\,\overline{a}_z$ satisfy Maxwell's equations ?