Energy Balance

According to the principle of conservation of energy, the energy can not be created or destroyed but it can be transformed from one form to another. The process of energy transformation is reversible but there are certain losses due to practical devices. Hence in energy conversion process the entire energy can not be transformed from one form to another. The loss in the process is called **energy loss.** In addition to the loss, some part of energy gets stored in the medium like magnetic field. This is called **energy stored.** There exists a perfect energy balance in the process of electromechanical energy conversion. Thus the input energy has three parts, transformed energy, energy loss and stored energy. The energy loss gets converted to heat energy in the electromechanical devices. Thus the **energy balance equation** for generating and motoring actions can be written as,

$$\begin{bmatrix}\text{Electrical energy}\\ \text{input from}\\ \text{electrical system}\end{bmatrix} = \begin{bmatrix}\text{Mechanical}\\ \text{transformed}\\ \text{output energy}\end{bmatrix} + \begin{bmatrix}\text{Change}\\ \text{energy}\\ \text{stored}\end{bmatrix} + \begin{bmatrix}\text{Total energy loss}\\ \text{i.e. energy dissipated}\\ \text{in the form of heat}\end{bmatrix}$$

... For motor (1)

$$\begin{bmatrix}\text{Mechanical energy}\\ \text{input from}\\ \text{mechanical system}\end{bmatrix} = \begin{bmatrix}\text{Electrical}\\ \text{transformed}\\ \text{energy output}\end{bmatrix} + \begin{bmatrix}\text{Change in}\\ \text{energy}\\ \text{stored}\end{bmatrix} + \begin{bmatrix}\text{Total energy loss}\\ \text{i.e. energy}\\ \text{dissipated}\end{bmatrix}$$

... For generator (2)

In these energy balance equations, the transformed energy terms are always positive but change in energy stored may be positive or negative. If energy stored increases, it is positive while if it decreases it is negative. The energy dissipated in the form of heat can

Energy Flow in Electromechanical Energy Conversion Device

For any electromechanical energy conversion, there are two systems, electrical system and mechanical system. These systems are coupled through a coupling field which is mostly a magnetic one.

Now for a generator, input is mechanical energy but entire input can not reach to the coupling field for the conversion. Part of it gets lost in the form of friction and windage losses. The available mechanical input is converted to electrical by the device via coupling field. But net output can not be equal to converted electrical energy as some part of it gets lost in the form of electrical losses such as copper (I^2R) losses and core or iron losses. The Fig. 2.2 shows the **energy flow diagram** of electromechanical energy conversion device working as a generator.

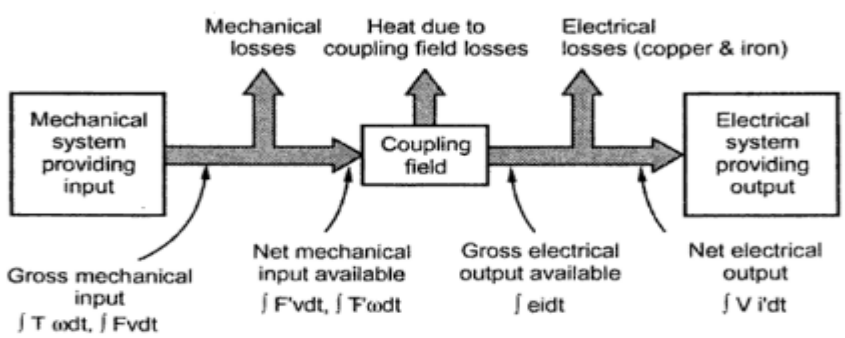

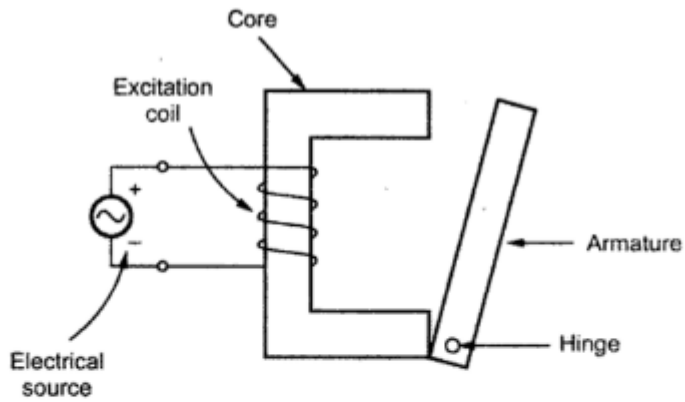

Fig. 2.4 Singly excited system

In special devices more than one excitation coils are necessary. Such systems are called multiple excited systems. Very commonly used multiple excited systems use two excitation coils and are called **doubly excited systems**. The examples are synchronous motors, alternators, d.c. shunt machines, loudspeakers etc. in which separate excitation coils are provided on stator and rotor. The Fig. 2.5 shows one such type of doubly excited magnetic system. Let us study the details of these two types of magnetic systems.

Electromechanical-Energy-Conversion Principles

The electromechanical-energy-conversion process takes place through the medium of the electric or magnetic field of the conversion device of which the structures depend on their respective functions.

- Transducers: microphone, pickup, sensor, loudspeaker
- Force producing devices: solenoid, relay, and electromagnet
- Continuous energy conversion equipment: motor, generator

Forces and Torques in Magnetic Field Systems

The Lorentz Force Law gives the force F on a particle of charge q in the presence of electric and magnetic fields.

$$F = q(E + v \times B)$$

Where, F : newtons, q: coulombs, E: volts/meter, B : telsas, v: meters/second

- In a pure electric-field system,

$$F = qE$$

- In pure magnetic-field systems,

$$F = q(v \times B)$$

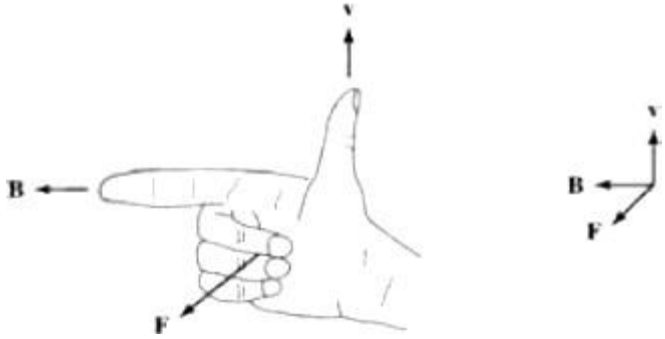

Figure : Right hand rule

- For situations where large numbers of charged particles are in motion,

$$F_v = \rho\left(E + v \times B\right)$$

$$J = \rho v$$

$$F_v = J \times B$$

ρ (charge density): coulombs/m3, F_v (force density): newtons/m3, $J = \rho v$ (current density): amperes/m2.

Most electromechanical-energy-conversion devices contain magnetic material.

- Forces act directly on the magnetic material of these devices which are constructed of rigid, non-deforming structures.
- The performance of these devices is typically determined by the net force, or torque, acting on the moving component. It is rarely necessary to calculate the details of the internal force distribution.
- Just as a compass needle tries to align with the earth's magnetic field, the two sets of fields associated with the rotor and the stator of rotating machinery attempt to align, and torque is associated with their displacement from alignment.
    - In a motor, the stator magnetic field rotates ahead of that of the rotor, pulling on it and performing work.
    - For a generator, the rotor does the work on the stator.

The Energy Method

> Based on the principle of conservation of energy: energy is neither created nor destroyed; it is merely changed in form.

> Fig. 1.2 shows a magnetic-field-based electromechanical-energy-conversion device.

- A lossless magnetic-energy-storage system with two terminals
- The electric terminal has two terminal variables: e (voltage), i (current).
- The mechanical terminal has two terminal variables: f_{fld} (force), x (position)
- The loss mechanism is separated from the energy-storage mechanism.

– Electrical losses: ohmic losses...
– Mechanical losses: friction, windage...

> Fig. 1.3: a simple force-producing device with a single coil forming the electric terminal, and a movable plunger serving as the mechanical terminal.

- The interaction between the electric and mechanical terminals, i.e. the electromechanical energy conversion, occurs through the medium of the magnetic stored energy.

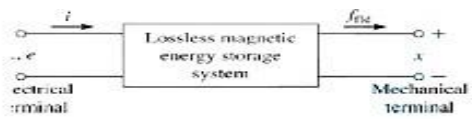

Fig 1.2 Schematic diagram of magnetic-electromechanical-energy-conversion

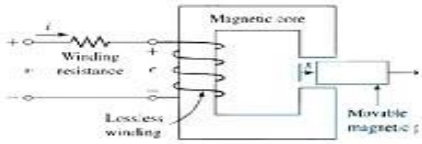

Fig. 1.3 Schematic diagram of simple force-producing device

- W_{fld} : the stored energy in the magnetic field

$$\frac{dW_{fld}}{dt} = ei - f_{fld}\frac{dx}{dt}$$
$$e = \frac{d\lambda}{dt}$$
$$dW_{fld} = id\lambda - f_{fld}dx$$

- From the above equation force can be solved as a function of the flux λ and the mechanical terminal position *x*.
- The above equations form the basis for the energy method

Energy Balance

Consider the electromechanical systems whose predominant energy-storage mechanism is in magnetic fields. For motor action, the energy transfer can be accounted as

$$\begin{pmatrix}\text{Energy input}\\ \text{form electric}\\ \text{sources}\end{pmatrix} = \begin{pmatrix}\text{Mechanical}\\ \text{energy}\\ \text{output}\end{pmatrix} + \begin{pmatrix}\text{Increase in energy}\\ \text{stored in magnetic}\\ \text{field}\end{pmatrix} + \begin{pmatrix}\text{Energy}\\ \text{converted}\\ \text{into heat}\end{pmatrix}$$

The ability to identify a lossless-energy-storage system is the essence of the energy method.

- This is done mathematically as part of the modeling process.
- For the lossless magnetic-energy-storage system of Fig. 1.2 can be rearranged and gives

$$dW_{elec} = dW_{mech} + dW_{fld}$$

where

$$dW_{elec} = id\lambda = \text{differential electric energy input}$$

$$dW_{mech} = f_{fld}dx = \text{differential mechanical energy output}$$

$$dW_{fld} = \text{differential change in magnetic stored energy}$$

- Here *e* is the voltage induced in the electric terminals by the changing magnetic stored energy. It is through this reaction voltage that the external electric circuit supplies power to the coupling magnetic field and hence to the mechanical output terminals.

$$dW_{elec} = ei\ dt$$

- The basic energy-conversion process is one involving the coupling field and its action and reaction on the electric and mechanical systems.
- Combining above two equation –

$$dW_{elec} = ei\ dt = dW_{mech} + dW_{fld}$$

Energy in Singly-Excited Magnetic Field Systems

In energy-conversion systems the magnetic circuits have air gaps between the stationary and moving members in which considerable energy is stored in the magnetic field.

> This field acts as the energy-conversion medium, and its energy is the reservoir between the electric and mechanical system.

Fig. 1.4 shows an electromagnetic relay schematically. The predominant energy storage occurs in the air gap, and the properties of the magnetic circuit are determined by the dimensions of the air gap.

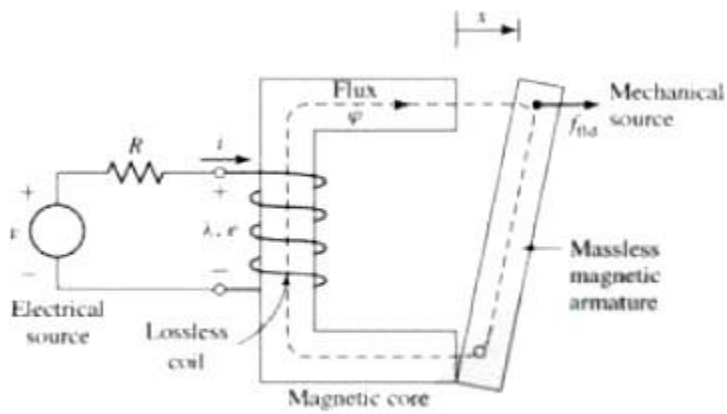

Fig.1.4 Schematic of an electromagnetic relay

$$\lambda = L(x)i$$
$$dW_{mech} = f_{fld}dx$$
$$dW_{fld} = id\lambda - f_{fld}dx$$

W_{fld} is uniquely specified by the values of λ and x. Therefore, λ and x are referred to as state variables.

Since the magnetic energy storage is lossless, it is conservative system. W_{fld} is the same regardless of how λ and x are brought to their final values. Fig 1.5 shows where tow separate the paths.

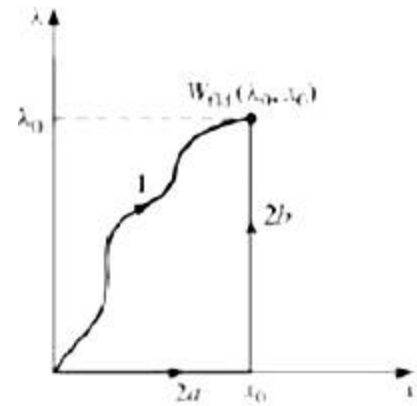

Fig. 1.5 Integration paths for W'_{fld}

On path 2a, $d\lambda=0$ and $f_{fld}=0$. Thus $df_{fld}=0$ on path 2a.

On path 2b, dx=0. Therefore the following equation will result

$$W'_{fld} = \int_V \left(\int_{H_c}^{H_0} B \cdot dH \right) dV$$

For magnetically linear systems the energy and co-energy are numerically equal

$$\frac{1}{2}\lambda^2 / L = \frac{1}{2}Li^2, \ \frac{1}{2}B^2/\mu = \frac{1}{2}\mu H^2$$

Graphical representation of energy and co-energy in singly excited magnetic field system is shown below.

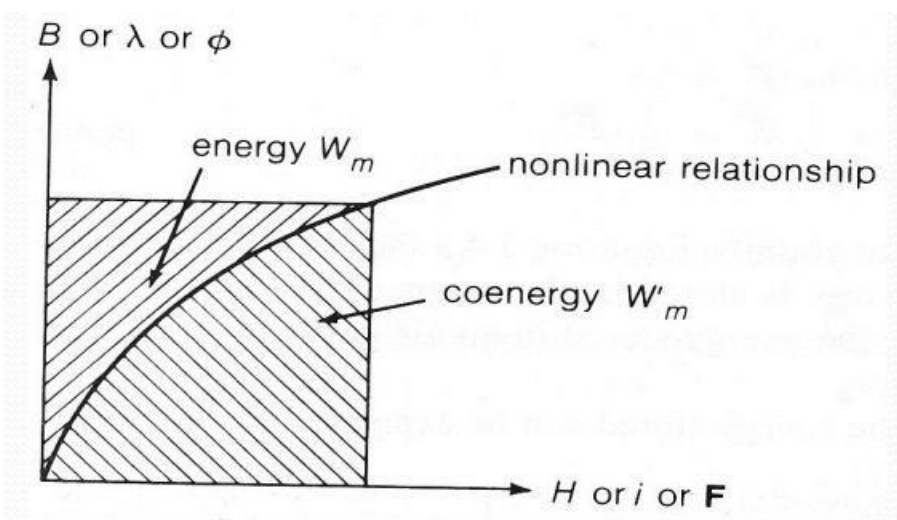

Figure: Graphical representation of energy and co-energy

Multiply Excited Magnetic Field Systems:

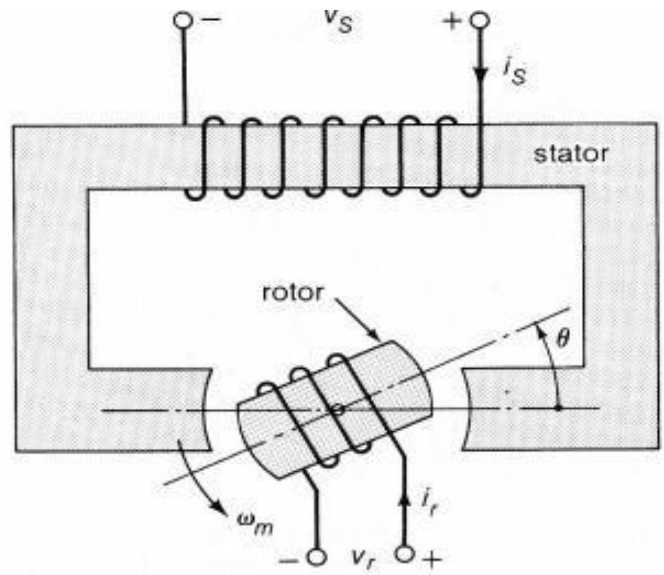

Figure: Doubly excited magnetic field system

The flux linkages of the stator and rotor windings can be expressed as functions of the coil currents:

$$\lambda_s = L_{ss}\, i_s + L_{sr}\, i_r$$

$$\lambda_r = L_{sr}\, i_s + L_{rr}\, i_r$$

where L_{ss} and L_{rr} are the self-inductances of the stator and rotor coils respectively, and L_{sr} is the stator-rotor mutual inductance. All these inductances are generally functions of the angle θ between the magnetic axes of the stator and rotor windings.

$$\begin{aligned} v_s &= R_s\, i_s + p\,\lambda_s \\ &= R_s\, i_s + L_{ss}(p\, i_s) + i_s(p\, L_{ss}) + L_{sr}(p\, i_r) + i_r(p\, L_{sr}) \end{aligned}$$

$$\begin{aligned} v_r &= R_r\, i_r + p\,\lambda_r \\ &= R_r\, i_r + L_{sr}(p\, i_s) + i_s(p\, L_{sr}) + L_{rr}(p\, i_r) + i_r(p\, L_{rr}) \end{aligned}$$

Neglecting the reluctances of the stator- and rotor-iron circuits, the electromagnetic torque can be found either from the energy or coenergy stored in the magnetic field of the air-gap region:

$$T_e = -\frac{\partial W_m(\lambda_s, \lambda_r, \theta)}{\partial \theta} = +\frac{\partial W_m'(i_s, i_r, \theta)}{\partial \theta}$$

For a linear system, the energy or coenergy stored in a pair of mutually coupled inductors is given by

$$W_m'(i_1, i_2, \theta) = \frac{1}{2} L_{ss}\, i_s^2 + L_{sr}\, i_s\, i_r + \frac{1}{2} L_{rr}\, i_r^2$$

UNIT II

DC GENERATORS

Principle of Operation of a D.C. Generator

All the generators work on a principle of dynamically induced e.m.f. This principle nothing but the Faraday's law of electromagnetism induction. It states that, 'whenever the number of magnetic lines of force i.e. flux linking with a conductor or a coil changes, an electromotive force is set up in that conductor or coil.' The change in flux associated with the conductor can exist only when there exists a relative motion between a conductor and the flux. The relative motion can be achieved by rotating conductor with respect to flux or by rotating flux with respect to a conductor. So a voltage gets generated in a conductor, as long as there exists a relative motion between conductor and the flux.

Such an induced e.m.f. which is due to the physical movement of coil or conductor with respect to flux or movement of flux with respect to coil or conductor is called dynamically induced e.m.f.

Key Point:

So a generating action requires following basic components to exist,

i) The conductor or a coil

ii) The relative motion between conductor and flux.

In a particular generator, the conductors are rotated to cut the magnetic flux, keeping flux stationary. To have a large voltage as the output, the number of conductors are connected together in a specific manner, to form a winding. This winding is called armature winding of a d.c. machine. The part on which this winding is kept is called armature of a d.c. machine. To have the rotation of conductors, the conductors placed on the armature are rotated with the help of some external device. Such an external device is called a prim mover. The commonly used prim movers are diesel engines, steam engines, steam turbines, water turbines etc. The necessary magnetic flux is produced by current carrying winding which is called field winding. The direction of the induced e.m.f. can be obtained by using Fleming's right hand role.

Single Loop DC Generator

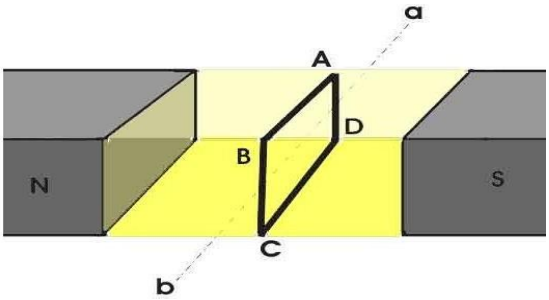

Figure: Single Loop Generator

In the figure above, a single loop of conductor of rectangular shape is placed between two opposite poles of magnet.

Let's us consider, the rectangular loop of conductor is ABCD which rotates inside the magnetic field about its own axis ab. When the loop rotates from its vertical position to its horizontal position, it cuts the flux lines of the field. As during this movement two sides, i.e. AB and CD of the loop cut the flux lines there will be an emf induced in these both of the sides (AB and BC) of the loop.

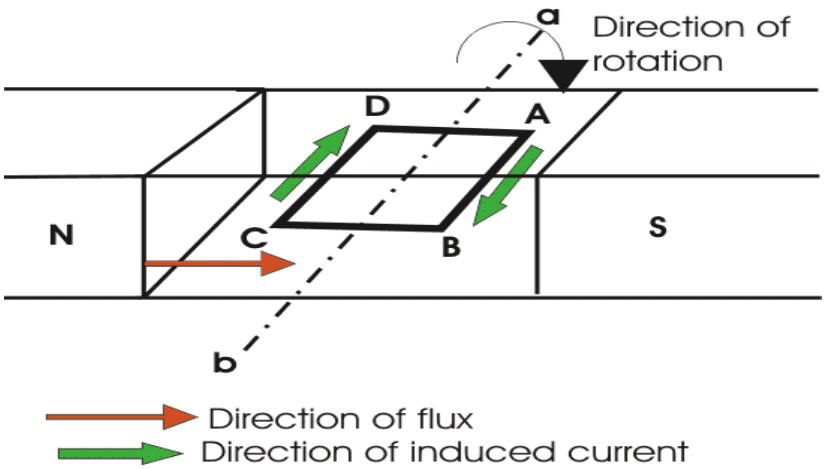

Figure: Single Loop Generator

As the loop is closed there will be a current circulating through the loop. The direction of the current can be determined by Flemming's right hand Rule. This rule says that if you stretch thumb, index finger and middle finger of your right hand perpendicular to each other, then thumbs indicates the direction of motion of the conductor, index finger indicates the direction of magnetic field i.e. N - pole to S - pole, and middle finger indicates the direction of flow of current through the conductor.

Now if we apply this right hand rule, we will see at this horizontal position of the loop, current will flow from point A to B and on the other side of the loop current will flow from point C to D.

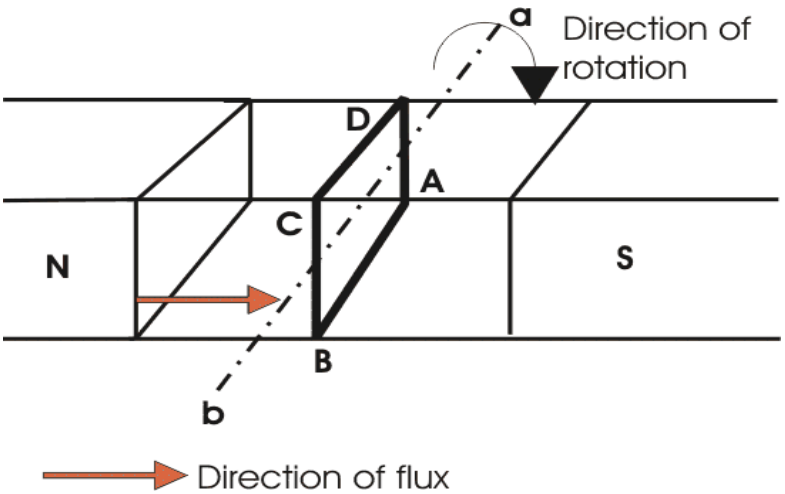

Figure: Single Loop Generator

Now if we allow the loop to move further, it will come again to its vertical position, but now upper side of the loop will be CD and lower side will be AB (just opposite of the previous vertical position). At this position the tangential motion of the sides of the loop is parallel to the flux lines of the field. Hence there will be no question of flux cutting and consequently there will be no current in the loop. If the loop rotates further, it comes to again in horizontal position. But now, said AB side of the loop comes in front of N pole and CD comes in front of S pole, i.e. just opposite to the previous horizontal position as shown in the figure beside.

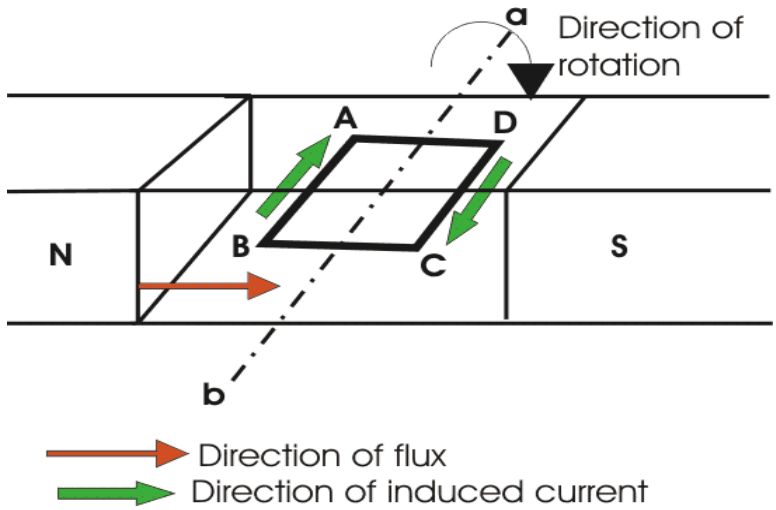

Figure: Single Loop Generator

Here the tangential motion of the side of the loop is perpendicular to the flux lines, hence rate of flux cutting is maximum here and according to Flemming's right hand Rule, at this position current flows from B to A and on other side from D to C. Now if the loop is continued to rotate about its axis, every time the side AB comes in front of S pole, the current flows from A to B and when it comes in front of N pole, the current flows from B to A. Similarly, every time the side CD comes in front of S pole the current flows from C to D and when it comes in front of N pole the current flows from D to C.

If we observe this phenomena in different way, it can be concluded, that each side of the loop comes in front of N pole, the current will flow through that side in same direction i.e. downward to the reference plane and similarly each side of the loop comes in front of S pole, current through it flows in same direction i.e. upwards from reference plane. From this, we will come to the topic of principle of DC generator. Now the loop is opened and connected it with a split ring as shown in the figure below. Split ring are made out of a conducting cylinder which cuts into two halves or segments insulated from each other. The external load terminals are connected with two carbon brushes which are rest on these split slip ring segments.

Working Principle of DC Generator

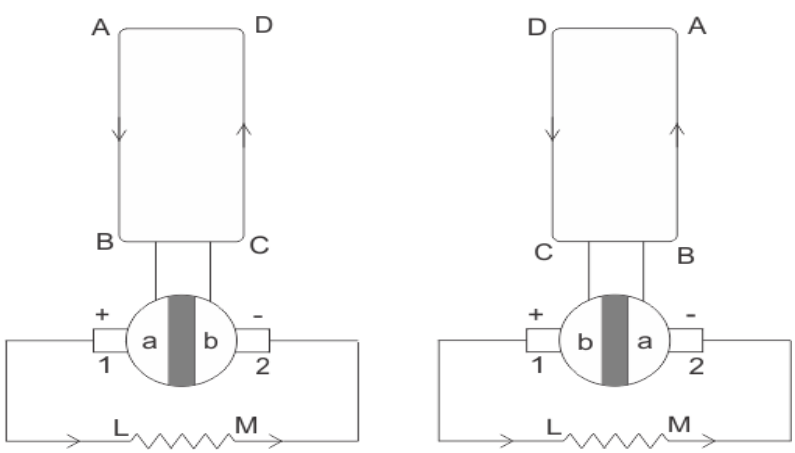

Fig: Commutation action

It is seen that in the first half of the revolution current flows always along ABLMCD i.e. brush no 1 in contact with segment a. In the next half revolution, in the figure the direction of the induced current in the coil is reversed. But at the same time the position of the segments a and b are also reversed which results that brush no 1 comes in touch with the segment b. Hence, the current in the load resistance again flows from L to M. The wave from of the current through the load circuit is as shown in the figure. This current is unidirectional.

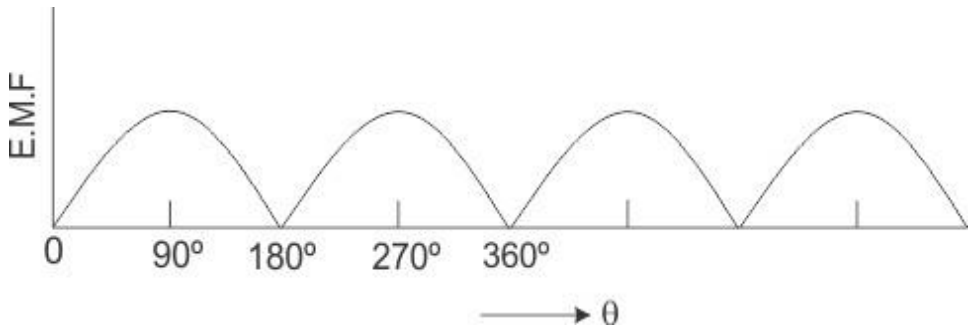

Fig: Output waveform of generator

This is basic working principle of DC generator, explained by single loop generator model. The position of the brushes of DC generator is so arranged that the change over of the segments a and b from one brush to other takes place when the plane of rotating coil is at right angle to the plane of the lines of force. It is so become in that position, the induced emf in the coil is zero.

Construction of a DC Machine:

A DC generator can be used as a DC motor without any constructional changes and vice versa is also possible. Thus, a DC generator or a DC motor can be broadly termed as a DC machine. These basic constructional details are also valid for the construction of a DC motor. Hence, let's call this point as construction of a DC machine instead of just 'construction of a DC generator.

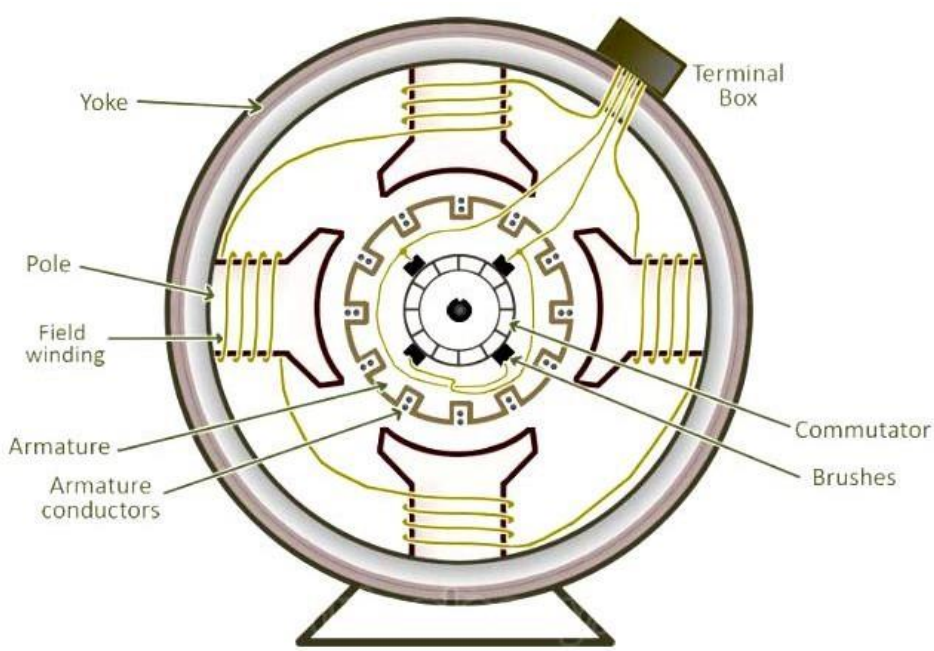

Figure 1: constructional details of a simple 4-pole DC machine

The above figure shows constructional details of a simple 4-pole DC machine. A DC machine consists of two basic parts; stator and rotor. Basic constructional parts of a DC machine are described below.

1. **Yoke:** The outer frame of a dc machine is called as yoke. It is made up of cast iron or steel. It not only provides mechanical strength to the whole assembly but also carries the magnetic flux produced by the field winding.

2. **Poles and pole shoes:** Poles are joined to the yoke with the help of bolts or welding. They carry field winding and pole shoes are fastened to them. Pole shoes serve two purposes; (i) they support field coils and (ii) spread out the flux in air gap uniformly.

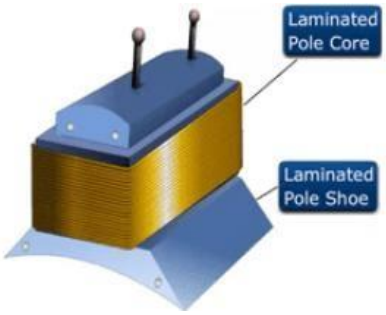

Figure 2: Pole Core and Poles Shoes representation

3. **Field winding:** They are usually made of copper. Field coils are former wound and placed on each pole and are connected in series. They are wound in such a way that, when energized, they form alternate North and South poles.

4. **Armature core:** Armature core is the rotor of a dc machine. It is cylindrical in shape with slots to carry armature winding. The armature is built up of thin laminated circular steel disks for reducing eddy current losses. It may be provided with air ducts for the axial air flow for cooling purposes. Armature is keyed to the shaft.

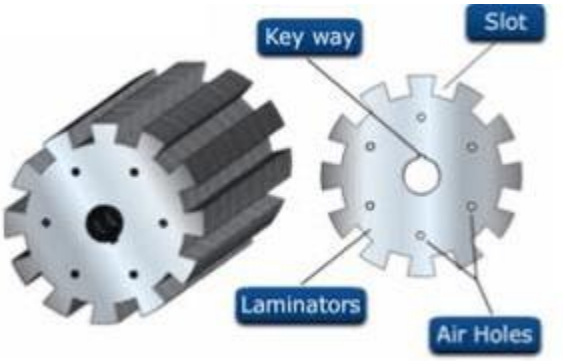

Figure 3: Armature of DC machine

5. **Armature winding:** It is usually a former wound copper coil which rests in armature slots. The armature conductors are insulated from each other and also from the armature core. Armature winding can be wound by one of the two methods; lap winding or wave winding. Double layer lap or wave windings are generally used. A double layer winding means that each armature slot will carry two different coils.

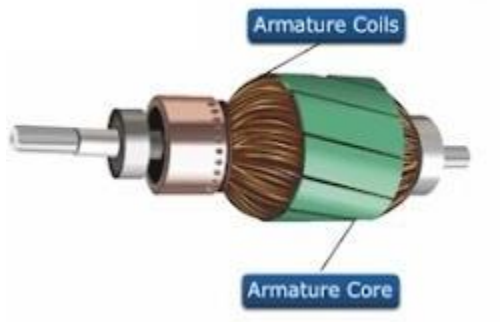

Figure 4: Armature Winding/coil of DC machine

6. **Commutator and brushes:** Physical connection to the armature winding is made through a commutator-brush arrangement. The function of a commutator, in a dc generator, is to collect the current generated in armature conductors. Whereas, in case of a dc motor, commutator helps in providing current to the armature conductors. A commutator consists of a set of copper segments which are insulated from each other. The number of segments is equal to the number of armature coils. Each segment is connected to an armature coil and the commutator is keyed to the shaft. Brushes are usually made from carbon or graphite. They rest on commutator segments and slide on the segments when the commutator rotates keeping the physical contact to collect or supply the current.

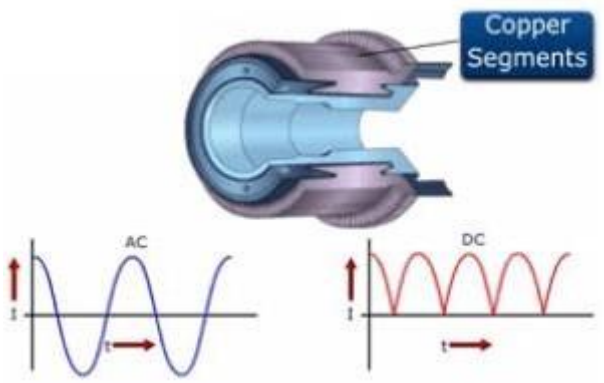

Figure 5: Commutator of DC machine

Armature Winding Terminology:

Now we are going to discuss about armature winding in details. Before going through this section, we should understand some basic terms related to armature winding of DC generator.

Pole Pitch:

The pole pitch is defined as peripheral distance between centers of two adjacent poles in DC machine. This distance is measured in term of armature slots or armature conductor come between two adjacent pole centers. Pole Pitch is naturally equal to the total number of armature slots divided by the number of poles in the machine.

If there are 96 slots on the armature periphery and 4 numbers of poles in the machine, the numbers of armature slots come between two adjacent poles centres would be 96/4 = 24. Hence, the pole pitch of that DC machine would be 24.

As we have seen that, pole pitch is equal to total numbers of armature slots divided by total numbers of poles, we alternatively refer it as armature slots per pole.

Coil side:

Coil of dc machine is made up of one turn or multi turns of the conductor. If the coil is made up of single turn or a single loop of conductor, it is called single turn coil. If the coil is made up of more than one turn of a conductor, we refer it as a multi-turn coil. A single turn coil will have one conductor per side of the coil whereas, in multi turns coil, there will be multiple conductors per side of the coil. Whatever may be the number of conductors per side of the coil, each coil side is placed inside one armature slot only. That means all conductors of one side of a particular coil must be placed in one single slot only. Similarly, we place all conductors of opposite side of the coil in another single armature slot.

Coil Span

Coil span is defined as the peripheral distance between two sides of a coil, measured in term of the number of armature slots between them. That means, after placing one side of the coil in a particular slot, after how many conjugative slots, the other side of the same coil is placed on the armature. This number is known as coil span.

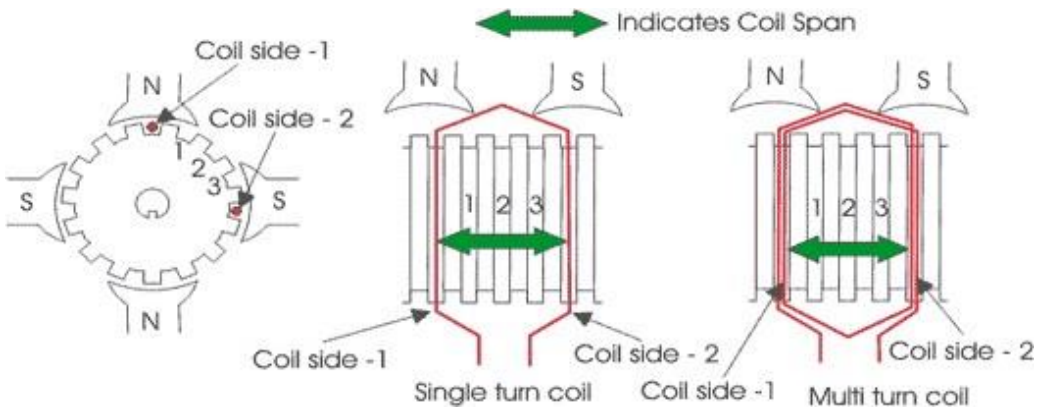

Figure: Armature windings

If the coil span is equal to the pole pitch, then the armature winding is said to be full - pitched. In this situation, two opposite sides of the coil lie under two opposite poles. Hence emf induced in one side of the coil will be in 180° phase shift with emf induced in the other side of the coil. Thus, the total terminal voltage of the coil will be nothing but the direct arithmetic sum of these two emfs. If the coil span is less than the pole pitch, then the winding is referred as fractional pitched. In this coil, there will be a phase difference between induced emf in two sides, less than 180o. Hence resultant terminal voltage of the coil is vector sum of these two emf's and it is less than that of full-pitched coil.

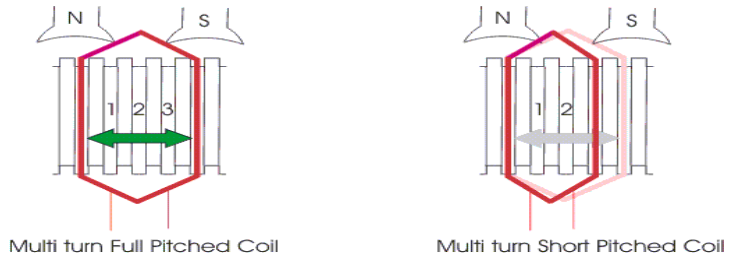

Figure: full pitched and half pitched coils

In practice, coil pitch (or Span) as low as eight tenth of a Pole Pitch, is employed without much serious reduction in emf. Fractional pitched windings are purposely used to effect substantial saving in copper of the end connection and for improving commutation.

Pitch of Armature Winding

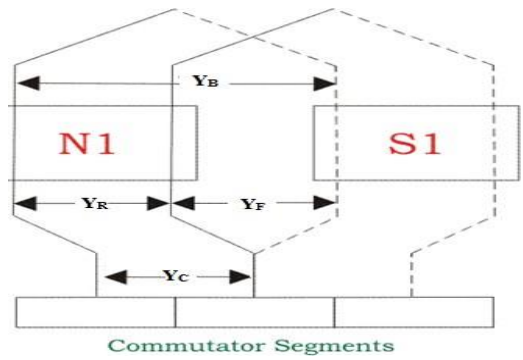

Back Pitch (Y_B)

A coil advances on the back of the armature. This advancement is measured in terms of armature conductors and is called back pitch. It is equal to the number difference of the conductor connected to a given segment of the commutator.

Front Pitch (Y_F)

The number of armature conductors or elements spanned by a coil on the front is called front pitch. Alternatively, we define the front-pitch as the distance between the second conductor of the next coil which connects the front, i.e., commutator end of the armature. In other words, it is the number difference of the conductors connected together at the back end of the armature. We are showing both front and back pitches for a lap, and a wave windings in the figure below.

Resultant Pitch (Y_R)

It is the distance between the beginning of one coil and the beginning of the next coil to which it is connected. As a matter of precautions, we should keep in mind that all these pitches, though normally stated concerning armature conductors, are also times of armature slots or commutator bars.

Commutator Pitch (Y_C)

Commutator pitch is defined as the distance between two commutator segments which two ends of same armature coil are connected. We measure commutator pitch in term of commutator bars or segment.

Single Layer Armature Winding

We place armature coil sides in the armature slots differently. In some arrangement, each one side of an armature coil occupies a single slot. In other words, we place one coil side in each armature slot. We refer this arrangement as single layer winding.

Two Layer Armature Winding

In other types of armature winding, arrangement two coil sides occupy every armature slot; one occupies upper half, and another one occupies the lower half of the slot. We so place the coils in two layers winding that if one side occupies upper half, then another side occupies the lower half of some other slot at a distance of one coil pitch away.

Armature Winding of A DC Machine

Based on type of winding connections we classified armature winding of a dc machine into two types. These winding connections are same for DC generator & DC motor.
Types of Windings in DC Machine,
1. Lap winding.
2. Wave winding.

Lap winding of a DC Machine

In this type of winding the completing end of one coil is connected to a commutator segment and to the start end of adjacent coil located under the same pole and similarly all coils are connected. This type of winding is known as lap because the sides of successive coils overlap each other.

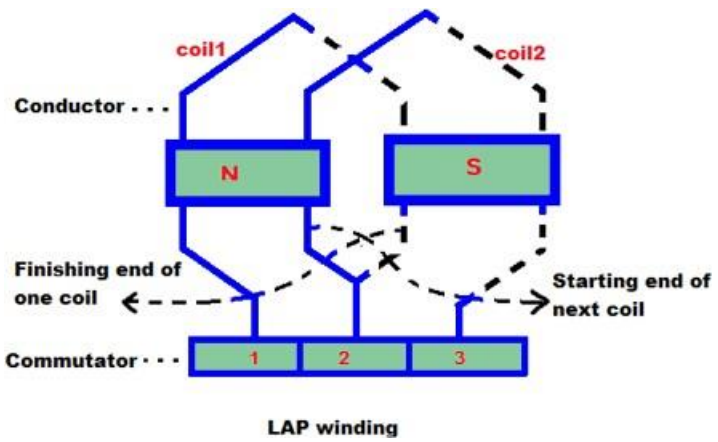

Lap winding may be simplex (single) or multiplex (duplex or triplex) winding. In simplex lap winding the connection of the winding is that there are as many parallel paths as there are number of poles.
Whereas for duplex, the number of parallel paths are equal to twice that of the number of poles and for triplex it is thrice. For this reason, the lap winding is called multiple or parallel winding. The sole purposes of such type of windings are,
(a) To increase the number of parallel paths enabling the armature current to increase i.e., for high current output.
(b) To improve commutation as the current per conductor decreases.

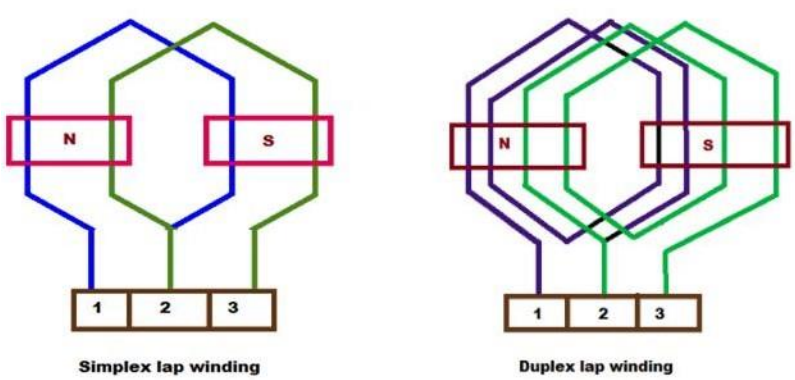

Notes on Lap winding

1. The coil or back pitch Y_B must be approximately equal to pole pitch i.e., $Y_B = Z/P$.

2. The back pitch and front pitch are odd and are of opposite sign. They differ from each other by 2m, where m = 1,2,3 for simplex, duplex, and triplex respectively.
   i.e., $Y_B = Y_F \pm 2m$
   When $Y_B > Y_F$ i.e., $Y_F + 2m$ then the winding progresses from left to right and such a winding is known as progressive winding. If $Y_B < Y_F$ i.e., $Y_B = Y_F - 2m$ then the winding progresses from right to left and such a winding is known as retrogressive winding.
3. The average pitch, $Y_{AVE} = (Y_B + Y_F)/2$.
4. Resultant pitch, Y_R is always even as difference between two odd numbers is even and is equal to 2m.
5. Commutator pitch, Y_C = m i.e., , 2, 3, 4 etc. for simplex, duplex, triplex, quadruplex etc.
6. Number of parallel paths = mP. Where, m = multiplicity.
   Example: For instance, the number of parallel paths for a 6-pole duplex lap winding is given by 6 x 2 = 12 paths.
7. The total number of poles are equal to the total number of brushes.
8. If Ia is the total armature current, then current per parallel path is Ia /P.
9. Lap winding is used for low voltage and high current machines.

Wave winding of a DC Machine

In wave winding the coils which are carrying current in one direction are connected in series circuit and the carrying current in opposite direction are connected in another series circuit. A wave winding is shown in figure.

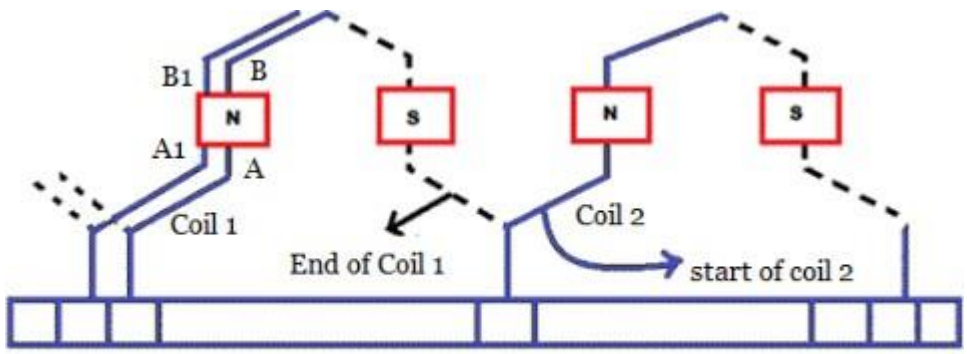

Wave Winding

If after passing once around the armature the winding falls in a slot to the left of its starting point then winding is said to be retrogressive. If it fails one slot to the right it is progressive.

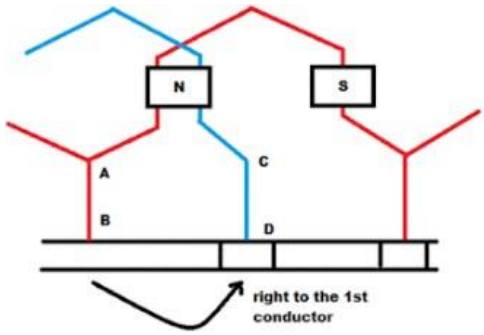

Progressive Wave winding

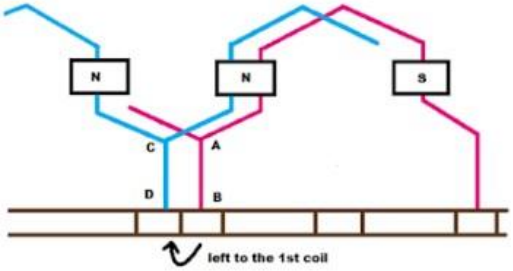

Retrogressive wave winding

Notes on Wave winding

The following are the important points to be remembered pertaining to wave winding,

1. Both pitches Y_B and Y_F are odd and of same sign.
2. Back and front pitches may be equal or differ by 2 and are merely equal to pole pitch.
3. Resultant pitch, $Y_R = Y_F + Y_B = (Z \pm 2)/2$

P = Number of poles

Z = Total number of conductors.

4. Commutator pitch, $Y_C = Y_A$ (Average pitch)

Y_C =(Number of commutator bars ± 1)/(Number of pair of poles).

5. Number of parallel paths are equal to 2m,where m is the multiplicity.
6. The number of brushes required are two irrespective of the number of poles.
7. If Ia is the total armature current then current carried by each path or conductor is Ia/2.
8. Since a wave winding is a series winding, it is used for high voltage and low current machine.

Emf Equation of a DC Generator

As the armature rotates, a voltage is generated in its coils. In the case of a generator, the emf of rotation is called the Generated emf or Armature emf and is denoted as Er = Eg. In the case of a motor, the emf of rotation is known as Back emf or Counter emf and represented as Er = Eb. The expression for emf is same for both the operations. I.e., for Generator as well as for Motor

Derivation of EMF Equation of a DC Machine – Generator and Motor

Let,

- **P** – Number of poles of the machine
- **ϕ** – Flux per pole in Weber.
- **Z** – Total number of armature conductors.
- **N** – Speed of armature in revolution per minute (r.p.m).
- **A** – Number of parallel paths in the armature winding.

In one revolution of the armature, the flux cut by one conductor is given as

$$\text{Flux cut by one conductor} = P\varphi \quad \text{wb} \ldots\ldots(1)$$

Time taken to complete one revolution is given as

$$t = \frac{60}{N} \quad \text{seconds} \quad \ldots\ldots(2)$$

Therefore, the average induced e.m.f in one conductor will be

$$e = \frac{P\varphi}{t} \quad \ldots\ldots(3)$$

Putting the value of (t) from Equation (2) in the equation (3) we will get

$$e = \frac{P\varphi}{60/N} = \frac{P\varphi N}{60} \text{ volts } \ldots\ldots(4)$$

The number of conductors connected in series in each parallel path = Z/A.

Therefore, the average induced e.m.f across each parallel path or the armature terminals is given by the equation shown below.

$$E = \frac{P\varphi N}{60} \times \frac{Z}{A} = \frac{PZ\varphi N}{60\,A} \text{ volts or}$$

$$E = \frac{PZ\varphi n}{A} \ldots\ldots(5)$$

Where n is the speed in revolution per second (r.p.s) and given as

$$n = \frac{N}{60}$$

For a given machine, the number of poles and the number of conductors per parallel path (Z/A) are constant. Hence, the equation (5) can be written as

$$E = K\varphi n$$

Where, K is a constant and given as

$$K = \frac{PZ}{A}$$

Therefore, the average induced emf equation can also be written as

$$E \propto \varphi\, n \quad \text{or}$$

$$E = K_1 \varphi N$$

Where K_1 is another constant and hence induced emf equation can be written as

$$E \propto \varphi N \quad \text{or}$$

$$E \propto \varphi\omega$$

Where ω is the angular velocity in radians/second is represented as

$$\omega = \frac{2\pi N}{60}$$

Thus, it is clear that the induced emf is directly proportional to the speed and flux per pole. The polarity of induced emf depends upon the direction of the magnetic field and the direction of rotation. If either of the two is reverse the polarity changes, but if two are reversed the polarity remains unchanged.

This induced emf is a fundamental phenomenon for all the DC Machines whether they are working as a generator or motor.

If the machine DC Machine is working as a Generator, the induced emf is given by the equation shown below.

$$E_g = \frac{PZ\,\varphi\,N}{60\,A} \quad \text{volts}$$

Where $\mathbf{E_g}$ is the **Generated Emf**

If the machine DC Machine is working as a Motor, the induced emf is given by the equation shown below.

$$E_b = \frac{PZ\,\varphi\,N}{60\,A} \quad \text{volts}$$

In a motor, the induced emf is called **Back Emf (E_b)** because it acts opposite to the supply voltage.

Types of DC Generators – Separately Excited and Self Excited

The DC generator converts the electrical power into electrical power. The magnetic flux in a DC machine is produced by the field coils carrying current. The circulating current in the field windings produces a magnetic flux, and the phenomenon is known as Excitation. DC Generator is classified according to the methods of their field excitation.

By excitation, the DC Generators are classified as Separately excited DC Generators and Self-excited DC Generators. There is also Permanent magnet type DC generators. The self-excited DC Generators are further classified as Shunt wound DC generators; Series wound DC generators and Compound wound DC generators. The Compound Wound DC generators are further divided as long shunt wound DC generators, and short shunt wound DC generators.

The field pole of the DC generator is stationary, and the armature conductor rotates. The voltage generated in the armature conductor is of alternating nature, and this voltage is converted into the direct voltage at the brushes with the help of the commutator.

The detailed description of the various types of generators is explained below.

Permanent Magnet type DC Generator

In this type of DC generator, there is no field winding is placed around the poles. The field produced by the poles of these machines remains constant. Although these machines are very compact but are used only in small sizes like dynamos in motorcycles, etc. The main disadvantage of these machines is that the flux produced by the magnets deteriorates with the passage of time which changes the characteristics of the machine.

Separately Excited DC Generator

A DC generator whose field winding or coil is energized by a separate or external DC source is called a separately excited DC Generator. The flux produced by the poles depends upon the field current with the unsaturated region of magnetic material of the poles. i.e. flux is directly proportional to the field current. But in the saturated region, the flux remains constant.

The figure of self-excited DC Generator is shown below.

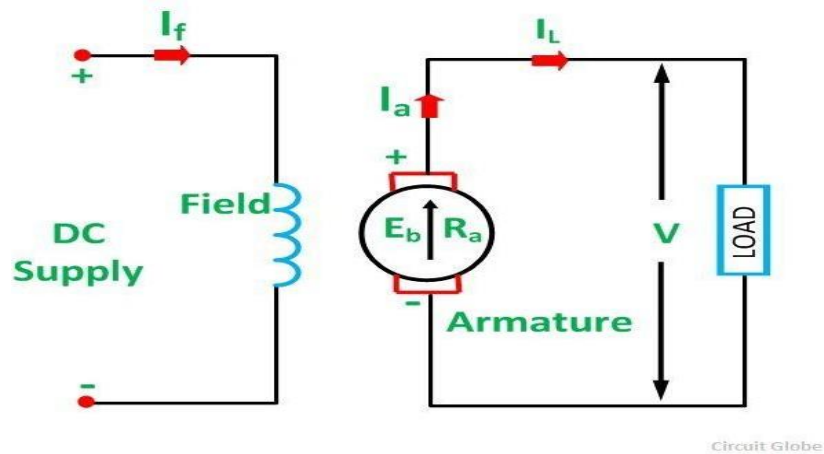

Separately Excited DC Generator

Here,

$I_a = I_L$ where I_a is the armature current and I_L is the line current.

Terminal voltage is given as

$$V = E_g - I_a R_a \quad \ldots\ldots(1)$$

If the contact brush drop is known, then the equation (1) is written as

$$V = E_g - I_a R_a - 2v_b \quad \ldots\ldots(2)$$

The power developed is given by the equation shown below.

$$\text{Power developed} = E_g I_a \quad \ldots\ldots(3)$$

$$\text{Power output} = VI_L = VI_a \quad \ldots\ldots(4)$$

Power output is given by the equation (4) shown above.

Self Excited DC Generator

Self-excited **DC Generator** is a device, in which the current to the field winding is supplied by the generator itself. In self-excited DC generator, the field coils mat be connected in parallel with the armature in the series, or it may be connected partly in series and partly in parallel with the armature windings.

The self-excited DC Generator is further classified as

1. Shunt Wound Generator
2. Series Wound Generator
3. Compound Wound Generator

1. Shunt Wound Generator

In a **shunt wound generator,** the field winding is connected across the armature winding forming a parallel or shunt circuit. Therefore, full terminal voltage is applied across it. A very small field current I_{sh}, flows through it because this winding has many turns of fine wire having very high resistance $R_{sh}$of the order of 100 ohms.

The connection diagram of shunt wound generator is shown below.

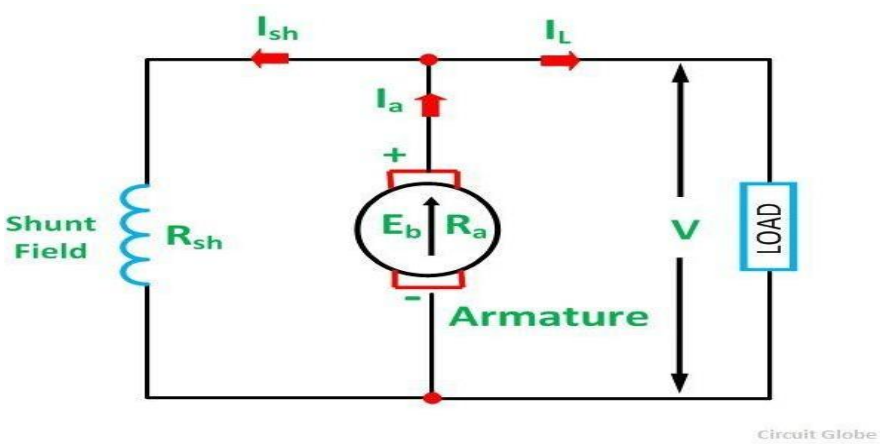

Shunt Wound DC Generator

Shunt field current is given as

$$I_{sh} = \frac{V}{R_{sh}}$$

Where R_{sh} is the shunt field winding resistance.

The current field I_{sh} is practically constant at all loads. Therefore, the DC shunt machine is considered to be a constant flux machine.

Armature current is given as

$$I_a = I_L + I_{sh}$$

Terminal voltage is given by the equation shown below.

$$V = E_g - I_a R_a$$

If the brush contact drop is included, the equation of the terminal voltage becomes

$$V = E_g - I_a R_a - 2v_b$$

$$\text{Power developed} = E_g I_a$$

$$\text{Power output} = VI_L$$

2. Series Wound Generator

A **series-wound generator** the field coils are connected in series with the armature winding. The series field winding carries the armature current. The series field winding consists of a few turns of wire of thick wire of larger cross-sectional area and having low resistance usually of the order of less than 1 ohm because the armature current has a very large value.

Its convectional diagram is shown below.

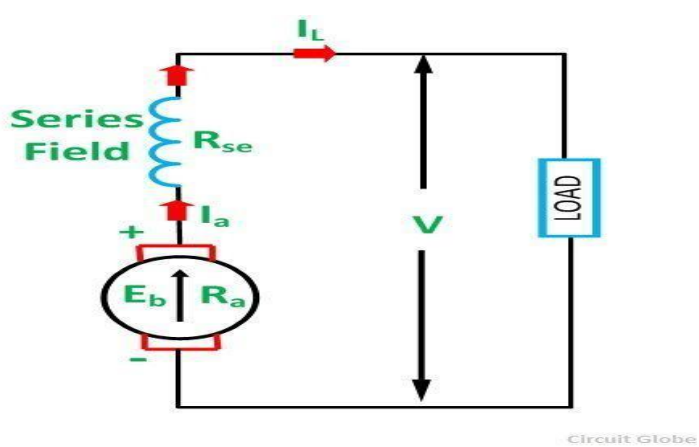

Series Wound DC Generator

Series field current is given as

$$I_{se} = I_L = I_a$$

R_{se} is known as the series field winding resistance.

Terminal voltage is given as

$$V = E_g - I_a R_a - I_{se} R_{se}$$

$$V = E_g - I_a (R_a + R_{se})$$

If the brush contact drop is included, the terminal voltage equation is written as

$$V = E_g - I_a (R_a + R_{se}) - 2V_b$$

$$\text{Power developed} = E_g I_a$$

$$\text{Power output} = VI_L = VI_a$$

The flux developed by the series field winding is directly proportional to the current flowing through it. But it is only true before magnetic saturation after the saturation flux becomes constant even if the current flowing through it is increased.

3. Compound Wound Generator

In a Compound Wound Generator, there are two sets of the field winding on each pole. One of them is connected in series having few turns of thick wire, and the other is connected in parallel having many turns of fine wire with the armature windings. In other words, the generator which has both shunt and series fields is called the compound wound generators.

If the magnetic flux produced by the series winding assists the flux produced by the shunt winding, then the machine is said to be **cumulative compounded**. If the series field flux opposes the shunt field flux, then the machine is called the **differentially compounded**.

It is connected in two ways. One is a long shunt compound generator, and another is a short shunt compound generator. If the shunt field is connected in parallel with the armature alone then the machine is called the short compound generator. In long shunt compound generator, the shunt field is connected in series with the armature. The two types of generators are discussed below in details.

Long Shunt Compound Wound Generator

In a long shunt wound generator, the shunt field winding is parallel with both armature and series field winding. The connection diagram of long shunt wound generator is shown below.

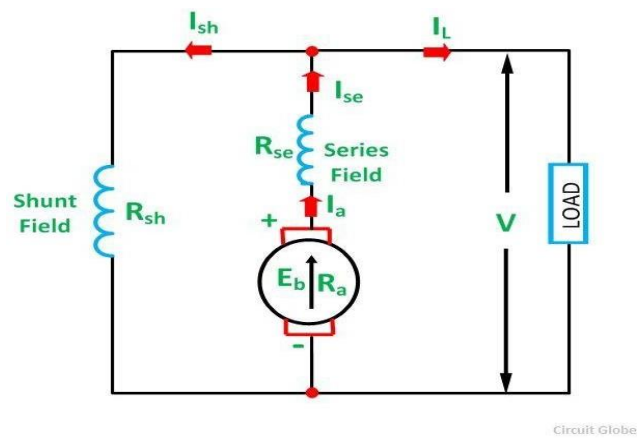

Long Shunt Compound Wound Generator

Shunt field current is given as

$$I_{sh} = \frac{V}{R_{sh}}$$

Series field current is given as

$$I_{se} = I_a = I_L + I_{sh}$$

Terminal voltage is given as

$$V = E_g - I_a R_a - I_{se} R_{se} = E_g - I_a (R_a + R_{se})$$

If the brush contact drop is included, the terminal voltage equation is written as

$$V = E_g - I_a (R_a + R_{se}) - 2V_b$$

$$\text{Power developed} = E_g I_a$$

$$\text{Power output} = VI_L$$

Short Shunt Compound Wound Generator

In a Short Shunt Compound Wound Generator, the shunt field winding is connected in parallel with the armature winding only. The connection diagram of short shunt wound generator is shown below.

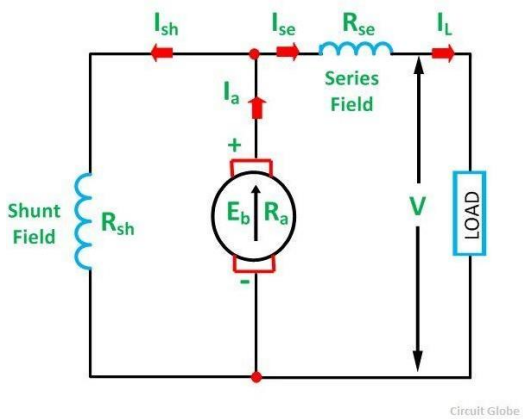

Short Shunt Compound Wound Generator

Series field current is given as

$$I_{se} = I_L$$

Shunt field current is given as

$$I_{sh} = \frac{V + I_L R_{se}}{R_{sh}} = \frac{E_g - I_a R_a}{R_{sh}}$$

$$I_a = I_L + I_{sh}$$

Terminal voltage is given as

$$V = E_g - I_a R_a - I_L R_{se}$$

If the brush contact drop is included, the terminal voltage equation is written as

$$V = E_g - I_a R_a - I_L R_{se} - 2V_b$$

$$\text{Power developed} = E_g I_a$$

$$\text{Power output} = VI_L$$

In this type of DC generator, the field is produced by the shunt as well as series winding. The shunt field is stronger than the series field. If the magnetic flux produced by the series winding assists the flux produced by the shunt field winding, the generator is said to be Cumulatively Compound Wound generator.

If the series field flux opposes the shunt field flux, the generator is said to be Differentially Compounded.

Voltage buildup in self excited Generator or Dc Shunt Generato

A self excited DC generator supplies its own field excitation . A self excited generator shown in figure is known as a shunt generator because its field winding is connected in parallel with the armature. Thus the armature voltage supplies the field current.

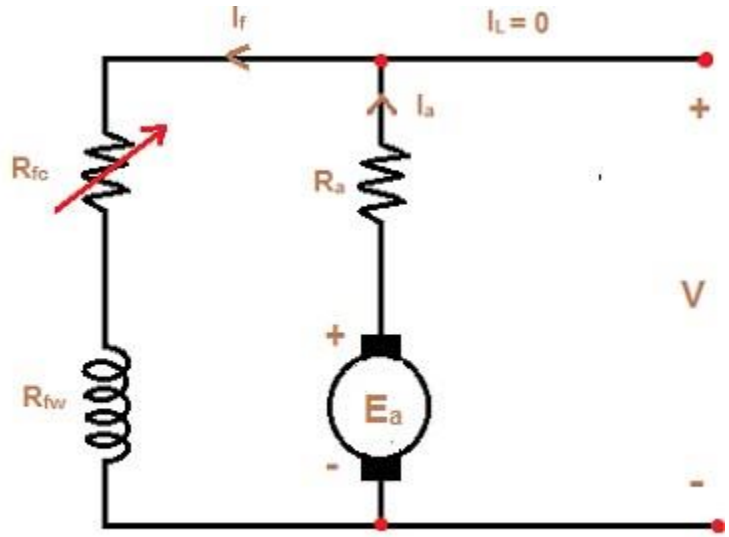

Figure - Equivalent circuit of a shunt dc generator

This generator will build up a desired terminal voltage. Assume that the generator in figure has no load connected to it and armature is driven at a certain speed by a prime mover. we shall study the condition under which the voltage buildup takes place. Due to this residual flux, a small voltage Ear will be generated. It is given by

$$E_{ar} = K\,\phi_{res}\,\omega$$

This voltage is of the order of 1V or 2V . It causes a current If to flow in the field winding in the generator. The field current is given by

$$I_f = \frac{V}{R_f}$$

This field current produces a magneto motive force in the field winding, which increases the flux. This increase in flux increases the generated voltage Ea. The increased armature voltage Ea increases the terminal voltage V. with the increase in V, the field current **If** increases further. This in turn increases Φ and consequently Ea increases further. The process of the voltage buildup continues. Figure shows the voltage buildup of a dc shunt generator.

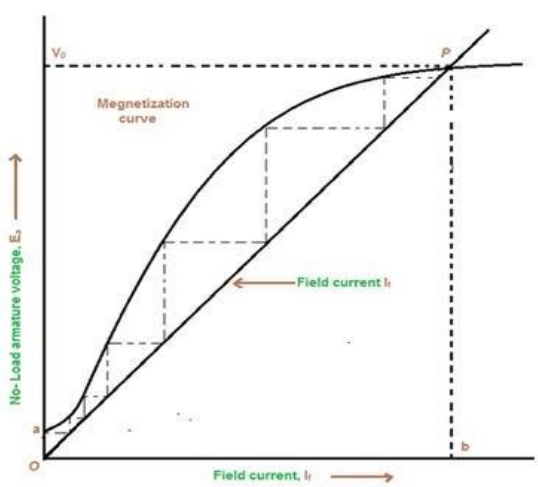

OCC Characteristics of DC generator

The effect of magnetic saturation in the pole faces limits the terminal voltage of the generator to a steady state value.
We have assumed that the generator is no load during the buildup process. The following equations describe the steady state operation.

$$I_a = I_f$$

$$V = E_a - I_a R_a = E_a - I_f R_a$$

Since the field current If in a shunt generator is very small, the voltage drop If Ra can be neglected, and
V= Ea
The Ea versus If curve is the magnetization curve shown in figure

For the field circuit V = If Rf

The straight line given by V = If Rf is called the **field-resistance line**.

The field resistance line is a plot of the voltage If Rf across the field circuit versus the field If. The slop this line is equal to the resistance of the field circuit.

The no-load terminal voltage V0 of thr generator. thus, the intersection point *P* of the magnetization curve and the field resistance line gives the no-load terminal voltage V0(*bP*) and the corresponding field current (*Ob*). Normally , in the shunt generator the voltage buildup to the value given by the point *P*. at this point Ea = If Rf = V0.

If the field current corresponding to point P is increase further , there is no further increase in the terminal voltage.

The no-load voltage is adjusted by adding resistance in series with shunt field. This increase slope of this line causing the operating point to shift at lower voltage

The operating point are graphical solution of two simultaneous equation namely , the magnetization curve and field resistance line . A graphical solution is preferred due to non-linear nature of magnetization curve.
Self excited generator are designed to obtain no-load voltage from 50% to 125% of the rated value while varying the added resistance in field circuit from maximum to zero value.

Critical Field Resistance:

Figure below shows the voltage buildup in the dc shunt generator for various resistances of the field circuit.

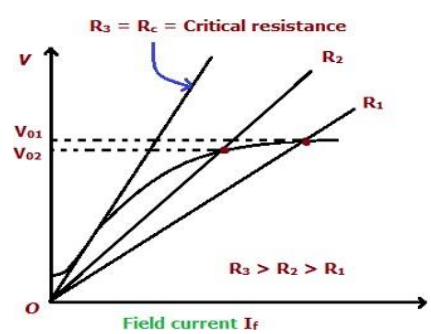

Fig: Determination of critical resistance

A decrease in the resistance of the field circuit reduces the slope of the field resistance line result in higher voltage. If the speed remains constant, an increase in the resistance of field circuit increases the slop of field resistance line, resulting in a lower voltage. If the field circuit resistance is increased to Rc which is terminal as the critical resistance of the field, the field resistance line becomes a tangent to the initial part of the magnetization curve. When the field resistance is higher than this value, the generator fails to excite.

Critical Speed:

Figure shows the variation of no-load voltage with fixed Rf and variable speed of the armature.

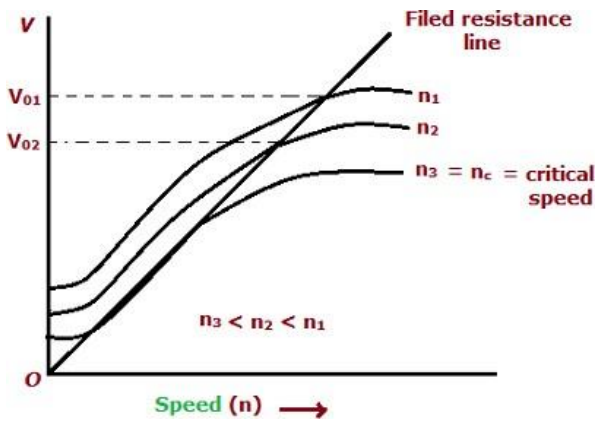

Fig: Determination of critical speed

The magnetization curve varies with the speed and its ordinate for any field current is proportional to the speed of the generator. all the points on the magnetization curve are lowered, and the point of intersection of the magnetization curve and the field resistance line moves downwards. at a particular speed, called the critical speed, the field resistance line becomes tangential to the magnetization curve. below the critical speed the voltage will not build up.

In Brief, the following condition must be satisfied for voltage buildup in a self-excited generator. There must be sufficient residual flux in the field poles.

1. the field terminal should be connected such a way that the field current increases flux in the direction of residual flux.
2. The field circuit resistance should be less than the critical field circuit resistance.

If there is a no residual flux in the field poles, Disconnected the field from the armature circuit and apply a dc voltage to the field winding. this process is called Flashing the field. It will induce some residual flux in the field poles.

Causes for Failure to Self Excite and Remedial Measures

There may be one or more of the following reasons due which a self excited generator may fail to build up voltage.

1. No residual magnetism

The start of the buildup process needs some residual magnetism in the magnetic circuit of the generator. If there is little or no residual magnetism. because of inactivity or jarring in shipment, no voltage will be induced that can produce field current.

2. Reversal of Field Connections

The voltage induced owing to residual magnetism acts across the field and results in flow or current in the field coils in such a direction as to produce magnetic flux in the same direction as the residual flux.

Reversal of connections of the field winding destroys the residual magnetism which causes the generator failure to build up voltage.

3. In case of dc series wound generators

The resistance in the load circuit may be more than its critical resistance, which may be due to

(i) open-circuit
(ii) high resistance of load circuit
(iii) faulty contact between brushes and commutator and
(iv) commutator surface dirty or greasy.

4. In case of shunt wound generator

(a) the resistance of the shunt field circuit may be greater than the critical resistance;
(b) the resistance in the load circuit may be lower than the critical resistance;
(c) the speed of rotation may not be equal to rated one.

Remedy

In case the generator is started up for the first time, it may be that no voltage will be built up either because the poles have no residual magnetism or the poles have retained some residual magnetism but the field winding connections are reversed so that the magnetism developed by the field winding on start has destroyed the residual magnetism and the machine can not "build up". In both the cases, the field coils must be connected to a dc source (a storage battery) for a short while to magnetise the poles. The application of external source of direct current to the field is called flashing of the field.

Armature Reaction in DC Machines

In a DC machine, two kinds of magnetic fluxes are present; 'armature flux' and 'main field flux'. The effect of armature flux on the main field flux is called as armature reaction.

MNA And GNA

EMF is induced in the armature conductors when they cut the magnetic field lines. There is an axis (or, you may say, a plane) along which armature conductors move parallel to the flux lines and, hence, they do not cut the flux lines while on that plane. MNA (Magnetic Neutral Axis) may be defined as the axis along which no emf is generated in the armature conductors as they move parallel to the flux lines. Brushes are always placed along the MNA because reversal of current in the armature conductors takes place along this axis.

GNA (Geometrical Neutral Axis) may be defined as the axis which is perpendicular to the stator field axis.

Armature Reaction

The effect of armature reaction is well illustrated in the figure below.

Consider, no current is flowing in the armature conductors and only the field winding is energized (as shown in the first figure of the above image). In this case, magnetic flux lines of the field poles are uniform and symmetrical to the polar axis. The 'Magnetic Neutral Axis' (M.N.A.) coincides with the 'Geometric Neutral Axis' (G.N.A.).

The second figure in the above image shows armature flux lines due to the armature current. Field poles are de-energised

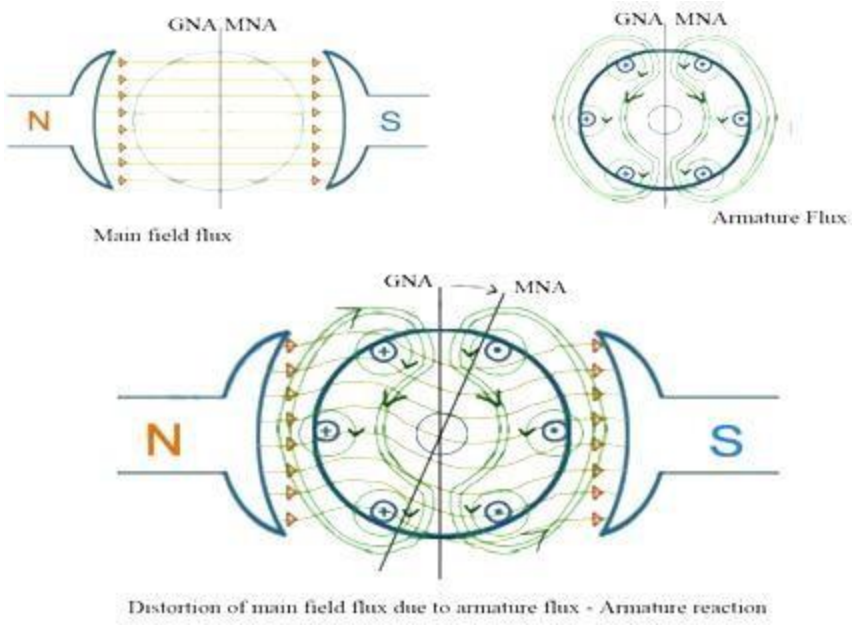

Fig: Armature reaction

Now, when a DC machine is running, both the fluxes (flux due to the armature conductors and flux due to the field winding) will be present at a time. The armature flux superimposes with the main field flux and, hence, disturbs the main field flux (as shown in third figure the of above image). This effect is called as armature reaction in DC machines.

The Adverse Effects Of Armature Reaction:

1. Armature reaction weakens the main flux. In case of a dc generator, weakening of the main flux reduces the generated voltage.
2. Armature reaction distorts the main flux, hence the position of M.N.A. gets shifted (M.N.A. is perpendicular to the flux lines of main field flux). Brushes should be placed on the M.N.A., otherwise, it will lead to sparking at the surface of brushes. So, due to armature reaction, it is hard to determine the exact position of the MNA

For a loaded dc generator, MNA will be shifted in the direction of the rotation. On the other hand, for a loaded dc motor, MNA will be shifted in the direction opposite to that of the rotation.

How To Reduce Armature Reaction?

Usually, no special efforts are taken for small machines (up to few kilowatts) to reduce the armature reaction. But for large DC machines, compensating winding and interpoles are used to get rid of the ill effects of armature reaction.

Compensating winding: Now we know that the armature reaction is due to the presence of armature flux. Armature flux is produced due to the current flowing in armature conductors. Now, if we place another winding in close proximity of the armature winding and if it carries the same current but in the opposite direction as that of the armature current, then this will nullify the armature field. Such an additional winding is called as compensating winding and it is placed on the pole faces. Compensating winding is connected in series with the armature winding in such a way that it carries the current in opposite direction.

Interpoles: Interpoles are the small auxiliary poles placed between the main field poles. Winding on the interpoles is connected in series with the armature. Each interpole is wound in such a way that its

magnetic polarity is same as that of the main pole ahead of it. Interpoles nullify the quadrature axis armature flux.

Demagnetizing and Cross Magnetizing Conductors

The conductors which are responsible for producing demagnetizing and distortion effects are shown in the Fig.1.

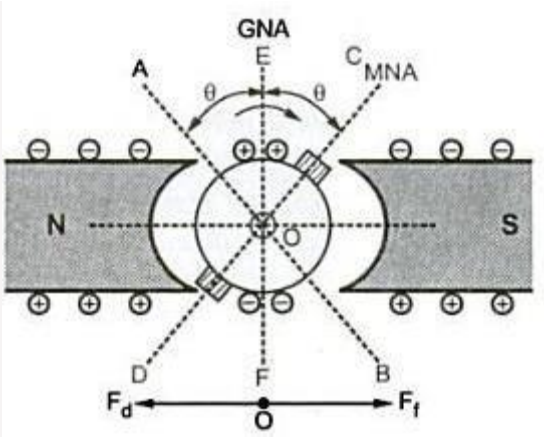

Fig. 1 Conductors which are responsible for producing demagnetizing and distortion effects

The brushes are lying along the new position of MNA which is at angle θ from GNA. The conductors in the region AOC = BOD = 2θ at the top and bottom of the armature are carrying current in such a direction as to send the flux in armature from right to left. Thus these conductors are in direct opposition to main field and called demagnetizing armature conductors.

The remaining armature conductors which are lying in the region AOD and BOC carry current in such a direction as to send the flux pointing vertically downwards i.e. at right angles to the main field flux. Hence these conductors are called cross magnetizing armature conductors which will cause distortion in main field flux.

These conductors are shown in the Fig. 2

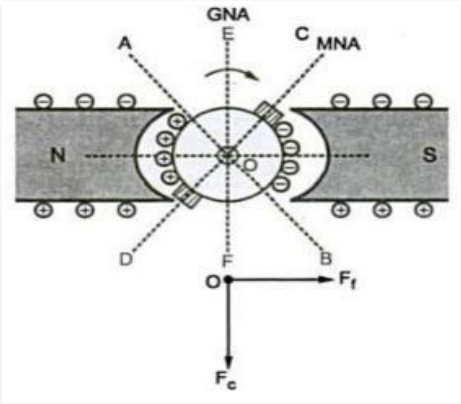

Fig. 2 Conductors which are responsible for producing Cross magnetization ffects

Calculation of Demagnetizing and Cross Magnetizing Amp-Turns

Let us the number of demagnetizing and cross magnetizing amp-turns.

Let Z = Total number of armature conductors

P = Number of poles

I = Armature conductor current in Amperes

= $I_a/2$ for simplex wave winding

= I_a/P for simplex lap winding

θ_m = Forward lead of brush in mechanical degrees.

The conductors which are responsible for demagnetizing ampere-turns are lying in the region spanning 4 θ_m degrees. The region is between angles AOC and BOD, as shown in the Fig. 2.

∴ Total number of armature conductors lying in angles AOC and BOD.

$$= \frac{4\theta_m}{360} \times Z$$

Since two conductors from one turn,

$$\text{Total number of turns in these angles} = \frac{1}{2} \cdot \frac{4\theta_m}{360} \times Z$$

$$= \frac{2\theta_m}{360} \times Z$$

$$\therefore \text{Demagnetising amp-turns} = \frac{2\theta_m}{360} \times IZ$$

$$\therefore \text{Demagnetising amp-turns / pole} = \frac{\theta_m}{360} \times IZ$$

$$\therefore \quad \boxed{AT_d \text{ per pole} = ZI \times \frac{\theta_m}{360}}$$

The conductor which are responsible fro cross magnetizing ampere turns are lying between the angles AOD and BOC, as shown in the Fig.2.

Total armature-conductors / pole = Z/P

From above we have found an expression for demagnetizing conductors per pole.

$$\text{Demagnetising conductors / pole} = Z = \frac{2\theta_m}{360}$$

$$\therefore \text{Cross magnetising conductors/pole} = \frac{Z}{P} - Z\frac{2\theta_m}{360}$$

$$= Z\left[\frac{1}{P} - \frac{2\theta_m}{360}\right]$$

$$\therefore \text{Cross magnetising amp-conductors / pole} = ZI\left[\frac{1}{P} - \frac{2\theta_m}{360}\right]$$

Since two conductors from one turn,

$$\text{Cross magnetising amp-turns / pole} = \frac{1}{2} \cdot ZI\left[\frac{1}{P} - \frac{2\theta_m}{360}\right]$$

$$= ZI\left[\frac{1}{2P} - \frac{\theta_m}{360}\right]$$

$$\therefore \quad \boxed{AT_c \text{ per pole} = ZI\left[\frac{1}{2P} - \frac{\theta_m}{360}\right]}$$

If the brush shift angle is given in electrical degrees then it should be converted into mechanical degrees by using the relation,

$$\boxed{\theta_{mechanical} = \frac{\theta_{electrical}}{\text{Pair of poles}} = \frac{\theta_{electrical}}{P/2} = \frac{2\theta_{electrical}}{P}}$$

Example :

A wave wound 4 pole d.c. generator with 480 armature conductors supplies a current of 144 A. The brushes are given an actual lead of 10°. Calculate the demagnetizing and cross magnetizing amp turns per pole.

Solution :

P = 4, Z = 480, I_a = 144 A

For wave wound,

$I = I_a/2 = 144/2 = 72$ A

$\theta_m = 10^o$

$$AT_d/\text{pole} = ZI\frac{\theta_m}{360}$$

$$= \frac{480 \times 72 \times 10}{360}$$

$$= \mathbf{960}$$

$$AT_c/\text{pole} = ZI\left[\frac{1}{2P} - \frac{\theta_m}{360}\right] = 480 \times 72\left[\frac{1}{2 \times 4} - \frac{10}{360}\right]$$

$$= \mathbf{3360}$$

Compensating Winding and Interpoles in DC Generator

In DC compound machine setup by armature current opposes magnetic field flux, this is known as armature reaction. The armature reaction has two effects (i) Demagnetizing effect and (ii) Cross magnetizing effect. Demagnetizing effect weakens the main field flux which in turn decreases the induced e.m.f (as $E \propto \varnothing$)). To overcome this effect a few extra turns/poles are added in series to main field winding. This creates a series field which serves two purposes,

(i) It helps to neutralize the demagnetizing effect of armature reaction.

(ii) If wound for cumulative compounded machine the electrical performance will be improved.

Compensating winding:

All armature conductors placed under the main poles region produces e.m.f which is at right angle (90°) to the main field e.m.f. This e.m.f causes distortion in main field flux. This is known as cross magnetizing effect. To minimize the cross magnetizing effect compensating winding is used. This compensating winding produces an m.m.f which opposes the m.m.f produced by armature conductors.

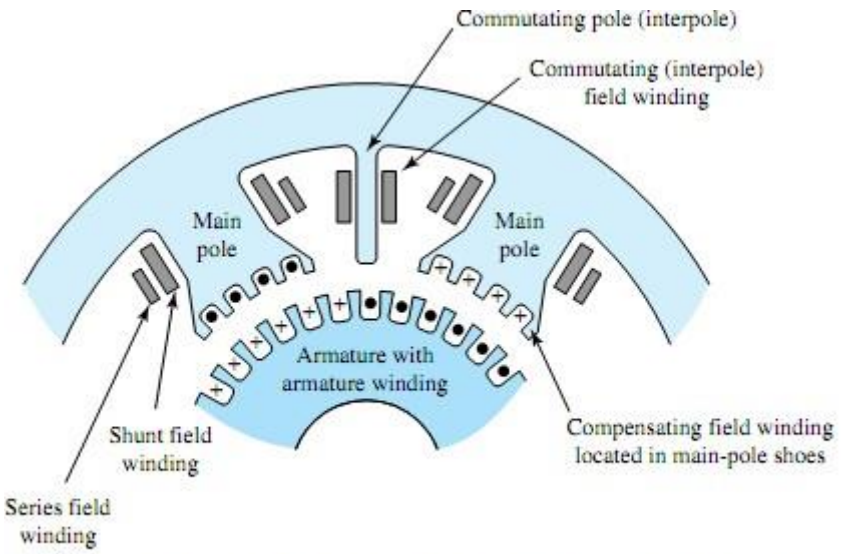

Section of a dc machine illustrating the arrangement of various field windings.

This objective is achieved by connecting compensating winding in series with armature winding. In absence of compensating winding, cross magnetizing effect causes sparking at the commutators and short circuiting the whole armature winding.

Let, Zc = Number of compensating conductors/pole

Za = Number of active armature conductors/pole

Ia = Armature current.

ZcIa= Za (Ia/A)

Where,

Ia/A=Armature current/conductor

Zc= Za/A

Compensating Winding Disadvantages

This winding neutralizes the cross magnetizing effect due to armature conductors only but not due to interpolar region. This winding is used in large machine in which load is fluctuating.

Interpoles

Cross magnetizing effect in interpolar region is by interpoles (also known as compoles (or) commutating poles). These interpoles are small in size and placed in between the main poles of yoke. Like compensating winding, interpoles are also connected in series with armature winding such that the m.m.f produced by them opposes the m.m.f produced by armature conductor in interpolar region. In generators, the interpole polarity is same as that of main pole ahead such that they induce an e.m.f which is known as commutating or reversing e.m.f. This commutating e.m.f minimizes the reactance e.m.f and hence sparks or arcs are eliminated.

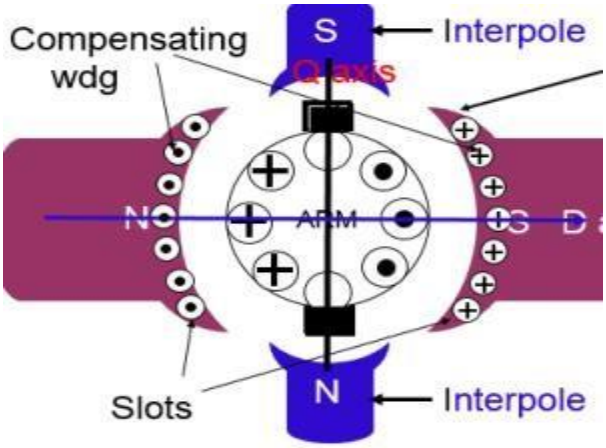

Fig: Intepoles

Compensating winding and Interpoles are used for same purpose but the difference between them is, interpoles produce e.m.f for neutralizing reactance e.m.f whereas compensating winding produces an m.m.f which opposes the m.m.f produced by conductors.

COMMUTATION:

The process of reversal of current in the short circuited armature coil is called 'Commutation'. This process of reversal takes place when coil is passing through the interpolar axis (q-axis), the coil is short circuited through commutator segments. Commutation takes place simultaneously for 'P' coils in a lap-wound machine and two coil sets of P/2 coils each in a wave-wound machine.

The process of commutation of coil 'B' is shown below. In figure '1.29' coil 'B' carries current from left to right and is about to be short circuited in figure '1.30' brush has moved by 1/3 rd of its width and the brush current supplied by the coil are as shown. In figure '1.31' coil 'B' carries no current as the brush is at the middle of the short circuit period and the brush current in supplied by coil C and coil A. In figure '1.32' the coil B which was carrying current from left to right carries current from right to left. In fig '1.33' spark is shown which is due to the reactance voltage. As the coil is embedded in the armature slots, which has high permeability, the coil posses appreciable amount of self inductance. The current is changed from +I to –I. So due to self inductance and variation in the current from +I to –I, a voltage is induced in the coil which is given by L dI/dt. Fig '1.34' shows the variation of current plotted on the time axis. Sparking can be avoided by the use of interpoles or commutating-poles.

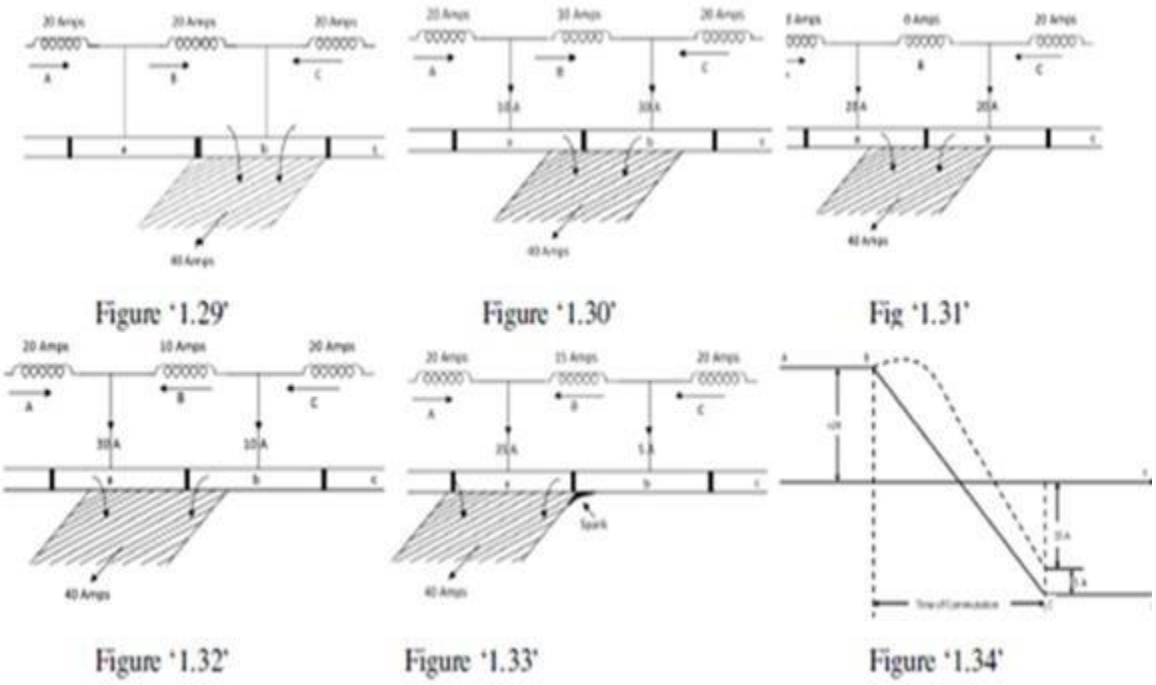

Fig: Commutation process

METHODS OF IMPROVING COMMUTATION:

Methods of Improving Commutation: There are two practical ways of improving commutation i.e. of making current reversal in the short-circuited coil as sparkless as possible. These methods are known as (i) resistance commutation and (ii) emf. commutation (which is done with the help of either brush lead or interpoles, usually the later).

Resistance Commutation: This method of improving commutation consists of replacing low-resistance Cu brushes by comparatively high-resistance carbon brushes. When current I from coil C reach the commutator segment b, it has two parallel paths open to it. The first part is straight from bar 'b' to the brush and the other parallel path is via the short-circuited coil B to bar 'a' and then to the brush. If the Cu brushes are used, then there is no inducement for the current to follow the second longer path, it would preferably follow the first path. But when carbon brushes having high resistance are used, then current I coming from C will prefer to pass through the second path. The additional advantages of carbon brushes are that (i) they are to some degree self lubricating and polish the commutator and (ii) should sparking occur, they would damage the commutator less than when Cu brushes are used. But some of their minor disadvantages are: (i) Due to their high contact resistance (which is beneficial to sparkless commutation) a loss of approximately 2 volt is caused. Hence, they are not much suitable for small machines where this voltage forms an appreciable percentage loss. (ii) Owing to this large loss, the commutator has to be made somewhat larger than with Cu brushes in order to dissipate heat efficiently without greater rise of temperature. (iii) because of their lower current density (about 7-8 A/cm2 as compared to 25-30 A/cm2 for Cu brushes) they need larger brush holders.

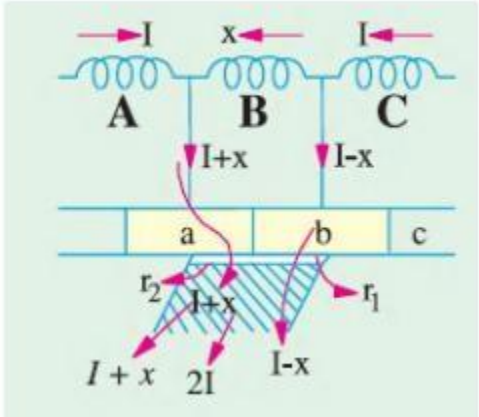

Fig: Resistance Commutation

EMF Commutation: In this method, arrangement is made to neutralize the reactance voltage by producing a reversing emf in the short-circuited coil under commutation. This reversing emf, as the name shows, is an emf in opposition to the reactance voltage and if its value is made equal to the latter, it will completely wipe it off, thereby producing quick reversal of current in the short-circuited coil which will result in sparkless commutation. The reversing emf may be produced in two ways: (i) either by giving the brushes a forward lead sufficient enough to bring the short-circuited coil under the influence of next pole of opposite polarity or (ii) by using Interpoles. The first method was used in the early machines but has now been abandoned due to many other difficulties it brings along with.

Interpoles of Compoles: These are small poles fixed to the yoke and spaced in between the main poles. They are wound with comparatively few heavy gauge Cu wire turns and are connected in series with the armature so that they carry full armature current. Their polarity, in the case of a generator, is the same as that of the main pole ahead in the direction of rotation. The function of interpoles is two-fold: (i) As their polarity is the same as that of the main pole ahead, they induce an emf in the coil (under commutation) which helps the reversal of current. The emf induced by the compoles is known as commutating or reversing emf. The commutating emf neutralizes the reactance emf thereby making commutation sparkless. With interpoles, sparkless commutation can be obtained up to 20 to 30% overload with fixed brush position. In fact, interpoles raise sparking limit of a machine to almost the same value as heating limit. Hence, for a given output, an interpole machine can be made smaller and, therefore, cheaper than a non-interpolar machine. As interpoles carry armature current, their commutating emf is proportional to the armature current. This ensures automatic neutralization of reactance voltage which is also due to armature current. (ii) Another function of the interpoles is to neutralize the cross-magnetising effect of armature reaction. Hence, brushes are not to be shifted from the original position.

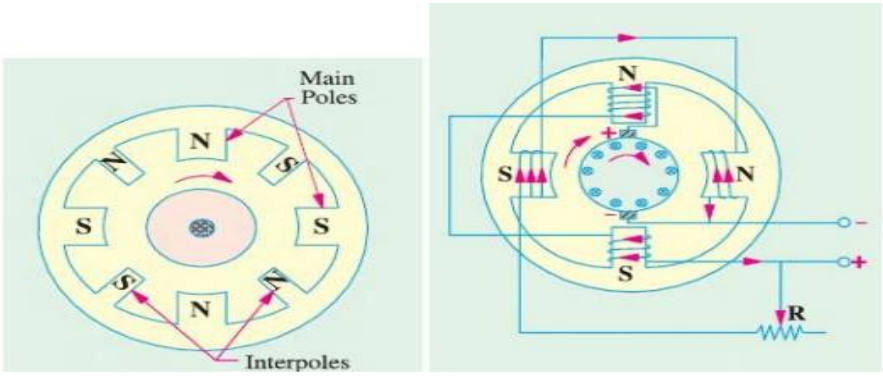

Fig: Interpoles of Compoles

OF as before, represents the mmf due to main poles. OA represents the crossmagnetising mmf due to armature. BC which represents mmf due to interpoles, is obviously in opposition to OA, hence they cancel each other out. This cancellation of crossmagnetisation is automatic and for all loads because both are produced by the same armature current. The distinction between the interpoles and compensating windings should be clearly understood. Both are connected in series and thier m.m.fs. are such as to neutralize armature reaction. But compoles additionally supply mmf for counteracting the reactance voltage induced in the coil undergoing commutation. Moreover, the action of the compoles is localized; they have negligible effect on the armature reaction occurring on the remainder of the armature periphery.

Characteristics of DC Generators

Generally, following three characteristics of DC generators are taken into considerations: (i) Open Circuit Characteristic (O.C.C.), (ii) Internal or Total Characteristic and (iii) External Characteristic. These characteristics of DC generators are explained below.

1. Open Circuit Characteristic (O.C.C.) (E_0/I_f)

Open circuit characteristic is also known as magnetic characteristic or no-load saturation characteristic. This characteristic shows the relation between generated emf at no load (E_0) and the field current (I_f) at a given fixed speed. The O.C.C. curve is just the magnetization curve and it is practically similar for all type of generators. The data for O.C.C. curve is obtained by operating the generator at no load and keeping a constant speed. Field current is gradually increased and the corresponding terminal voltage is recorded. The connection arrangement to obtain O.C.C. curve is as shown in the figure below. For shunt or series excited generators, the field winding is disconnected from the machine and connected across an external supply.

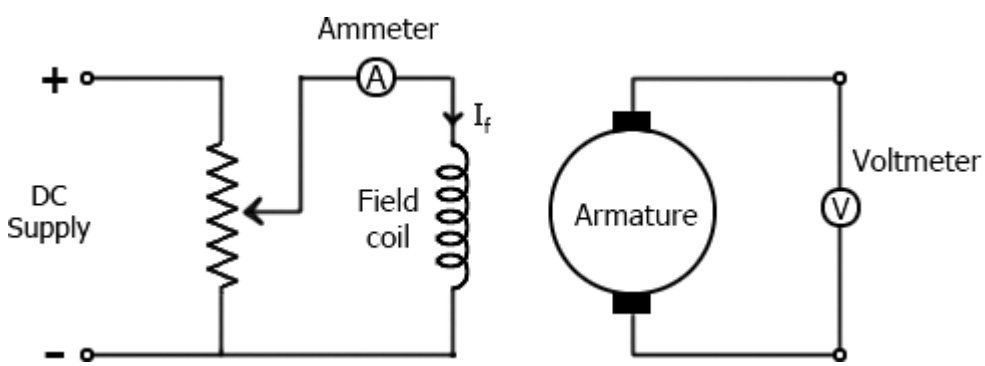

Fig: Circuit for OCC

Now, from the emf equation of dc generator, we know that Eg = kϕ. Hence, the generated emf should be directly proportional to field flux (and hence, also directly proportional to the field current). However, even when the field current is zero, some amount of emf is generated (represented by OA in the figure below). This initially induced emf is due to the fact that there exists some residual magnetism in the field poles. Due to the residual magnetism, a small initial emf is induced in the armature. This initially induced emf aids the existing residual flux, and hence, increasing the overall field flux. This consequently increases the induced emf. Thus, O.C.C. follows a straight line. However, as the flux density increases, the poles get saturated and the ϕ becomes practically constant. Thus, even we increase the If further, ϕ remains constant and hence, Eg also remains constant. Hence, the O.C.C. curve looks like the B-H characteristic.

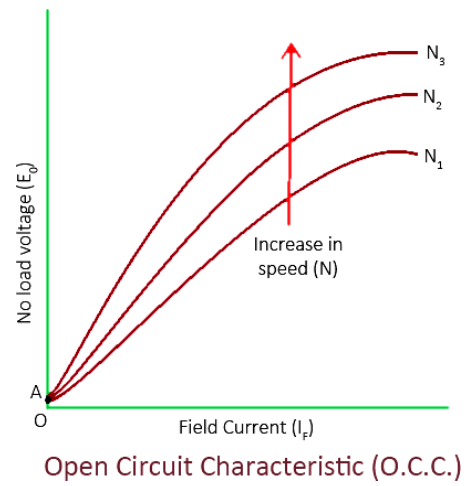

Open Circuit Characteristic (O.C.C.)

The above figure shows a typical no-load saturation curve or open circuit characteristics for all types of DC generators.

2. Internal or Total Characteristic (E/I_a)

An internal characteristic curve shows the relation between the on-load generated emf (Eg) and the armature current (Ia). The on-load generated emf Eg is always less than E0 due to the armature reaction. Eg can be determined by subtracting the drop due to demagnetizing effect of armature reaction from no-load voltage E0. Therefore, internal characteristic curve lies below the O.C.C. curve.

3. External Characteristic (V/I_L)

An external characteristic curve shows the relation between terminal voltage (V) and the load current (IL). Terminal voltage V is less than the generated emf Eg due to voltage drop in the armature circuit. Therefore, external characteristic curve lies below the internal characteristic curve. External characteristics are very important to determine the suitability of a generator for a given purpose. Therefore, this type of characteristic is sometimes also called as performance characteristic or load characteristic.

Internal and external characteristic curves are shown below for each type of generator.
Characteristics of Separately Excited DC Generator:

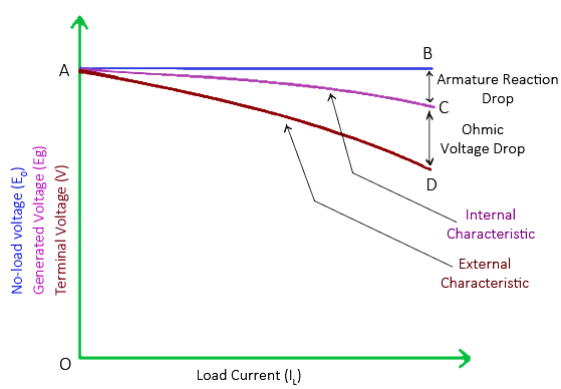

Characteristics of separately excited DC generator

If there is no armature reaction and armature voltage drop, the voltage will remain constant for any load current. Thus, the straight line AB in above figure represents the no-load voltage vs. load current IL. Due to the demagnetizing effect of armature reaction, the on-load generated emf is less than the no-load voltage. The curve AC represents the on-load generated emf Eg vs. load current ILi.e. Internal

characteristic (as Ia = IL for a separately excited dc generator). Also, the terminal voltage is lesser due to ohmic drop occurring in the armature and brushes. The curve AD represents the terminal voltage vs. load current i.e. external characteristic.

Characteristics of DC Shunt Generator

To determine the internal and external load characteristics of a DC shunt generator the machine is allowed to build up its voltage before applying any external load. To build up voltage of a shunt generator, the generator is driven at the rated speed by a prime mover. Initial voltage is induced due to residual magnetism in the field poles. The generator builds up its voltage as explained by the O.C.C. curve. When the generator has built up the voltage, it is gradually loaded with resistive load and readings are taken at suitable intervals. Connection arrangement is as shown in the figure below.

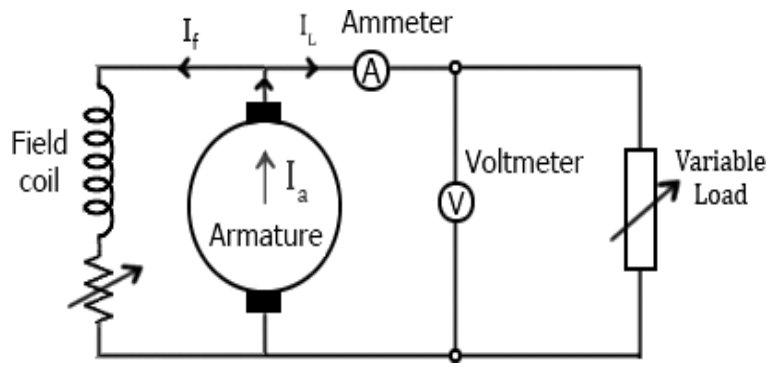

Fig: Circuit for External characteristics of shunt generator

Unlike, separately excited DC generator, here, IL≠Ia. For a shunt generator, Ia=IL+If. Hence, the internal characteristic can be easily transmitted to Eg vs. IL by subtracting the correct value of Iffrom Ia.

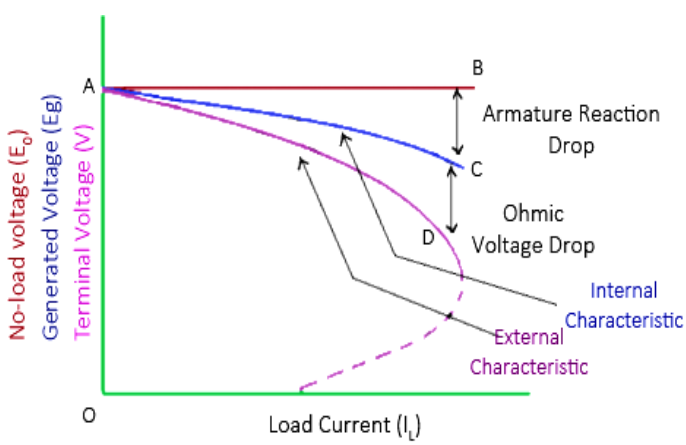

Characteristics of DC shunt generator

During a normal running condition, when load resistance is decreased, the load current increases. But, as we go on decreasing the load resistance, terminal voltage also falls. So, load resistance can be decreased up to a certain limit, after which the terminal voltage drastically decreases due to excessive armature reaction at very high armature current and increased I2R losses. Hence, beyond this limit any further decrease in load resistance results in decreasing load current. Consequently, the external characteristic curve turns back as shown by dotted line in the above figure.

Characteristics of DC Series Generator

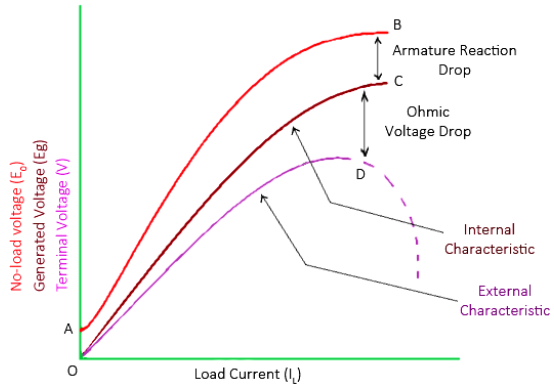

Characteristics of DC series generator

The curve AB in above figure identical to open circuit characteristic (O.C.C.) curve. This is because in DC series generators field winding is connected in series with armature and load. Hence, here load current is similar to field current (i.e. IL=If). The curve OC and OD represent internal and external characteristic respectively. In a DC series generator, terminal voltage increases with the load current. This is because, as the load current increases, field current also increases. However, beyond a certain limit, terminal voltage starts decreasing with increase in load. This is due to excessive demagnetizing effects of the armature reaction.

Characteristics Of DC Compound Generator

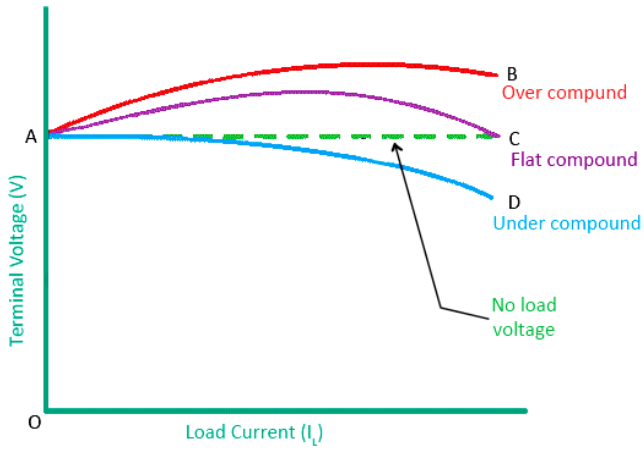

External characteristic of DC compound generator

The above figure shows the external characteristics of DC compound generators. If series winding amp-turns are adjusted so that, increase in load current causes increase in terminal voltage then the generator is called to be over compounded. The external characteristic for over compounded generator is shown by the curve AB in above figure.

If series winding amp-turns are adjusted so that, the terminal voltage remains constant even the load current is increased, then the generator is called to be flat compounded. The external characteristic for a flat compounded generator is shown by the curve AC.

If the series winding has lesser number of turns than that would be required to be flat compounded, then the generator is called to be under compounded. The external characteristics for an under compounded generator are shown by the curve AD.

Parallel Operation of D.C. Generators:

Here this explains you the parallel operation of dc generators and load sharing among them for the continuous power supply. In a DC power plant, power is usually supplied from several generators of small ratings connected in parallel instead of from one large generator. This is due to the following reasons:

(i) Continuity of service:

If a single large generator is used in the power plant, then in case of its breakdown, the whole plant will be shut down. However, if power is supplied from a number of small units operating in parallel, then in case of failure of one unit, the continuity of supply can be maintained by other healthy units.

(ii) Efficiency:

Generators run most efficiently when loaded to their rated capacity. Electric power costs less per kWh when the generator producing it is efficiently loaded. Therefore, when load demand on power plant decreases, one or more generators can be shut down and the remaining units can be efficiently loaded.

(iii) Maintenance and repair:

Generators generally require routine-maintenance and repair. Therefore, if generators are operated in parallel, the routine or emergency operations can be performed by isolating the affected generator while the load is being supplied by other units. This leads to both safety and economy.

(iv) Increasing plant capacity:

In the modern world of increasing population, the use of electricity is continuously increasing. When added capacity is required, the new unit can be simply paralleled with the old units. In many situations, a single unit of desired large capacity may not be available. In that case, a number of smaller units can be operated in parallel to meet the load requirement. Generally, a single large unit is more expensive.

(v) Non-availability of single large unit:

In many situations, a single unit of desired large capacity may not be available. In that case, a number of smaller units can be operated in parallel to meet the load requirement. Generally, a single large unit is more expensive.

Connecting Shunt Generators in Parallel:

The generators in a power plant are connected in parallel through bus-bars. The bus-bars are heavy thick copper bars and they act as +ve and -ve terminals. The positive terminals of the generators are connected to the +ve side of bus-bars and negative terminals to the negative side of bus-bars.

Fig. (3.15) shows shunt generator 1 connected to the bus-bars and supplying load. When the load on the power plant increases beyond the capacity of this generator, the second shunt generator 2 is connected in parallel with the first to meet the increased load demand. The procedure for paralleling generator 2 with generator 1 is as under:

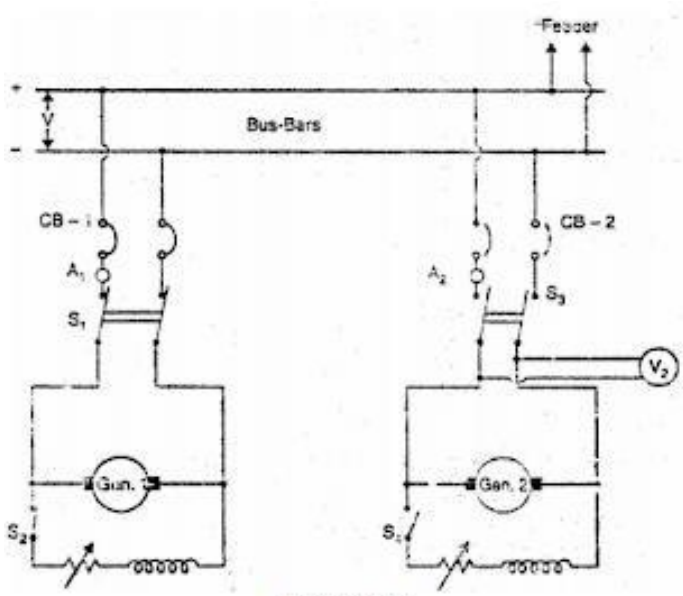

Fig. (3.15)

Parallel operation of shunt generators

(i) The prime mover of generator 2 is brought up to the rated speed. Now switch S4 in the field circuit of the generator 2 is closed.

(ii) Next circuit breaker CB-2 is closed and the excitation of generator 2 is adjusted till it generates a voltage equal to the bus-bars voltage.This is indicated by voltmeter V2.

(iii) Now the generator 2 is ready to be paralleled with generator 1. The main switch S3 is closed, thus putting generator 2 in parallel with generator 1. Note that generator 2 is not supplying any load because it's generated e.m.f. is equal to bus-bars voltage.The generator is said to be “floating” (i.e., not supplying any load) on the bus-bars.

(iv) If generator 2 is to deliver any current, then it's generated voltage E should be greater than the bus-bars voltage V. In that case, the current supplied by it is I = (E - V)/Ra where Ra is the resistance of the armature circuit. By increasing the field current (and hence induced e.m.f. E), the generator 2 can be made to supply the proper amount of load.

(v) The load may be shifted from one shunt generator to another merely by adjusting the field excitation. Thus if generator 1 is to be shut down, the whole load can be shifted onto generator 2 provided it has the capacity to supply that load. In that case, reduce the current supplied by generator 1 to zero (This will be indicated by ammeter A1) open C.B.-1 and then open the main switch S1.

Load Sharing of two generators:

The load sharing between shunt generators in parallel can be easily regulated because of their drooping characteristics.The load may be shifted from one generator to another merely by adjusting the field excitation.Let us discuss the load sharing of two generators which have unequal no-load voltages.

Let E1, E2 = no-load voltages of the two generators

R1, R2 = their armature resistances

V = common terminal voltage (Bus-bars voltage)

then I1 = (E1 - V)/R1 and I2= (E2-V)/R2

Thus the current output of the generators depends upon the values of E1 and E3.These values may be changed by field rheostats.The common terminal voltage (or bus-bars voltage) will depend upon

(i) the e.m.f.s of individual generators and

(ii) the total load current supplied.

It is generally desired to keep the bus bars voltage constant. This can be achieved by adjusting the field excitations of the generators operating in parallel.

Compound Generators in Parallel:

Under-compounded generators also operate satisfactorily in parallel but over compounded generators will not operate satisfactorily unless their series fields are paralleled. This is achieved by connecting two negative brushes together as shown in Fig. (3.16) (i). The conductor used to connect these brushes is generally called equaliser bar. Suppose that an attempt is made to operate the two generators in Fig. (3.16) (ii) in parallel without an equalizer bar. If, for any reason, the current supplied by generator 1 increases slightly, the current in its series field will increase and raise the generated voltage.

This will cause generator 1 to take more load. Since total load supplied to the system is constant, the current in generator 2 must decrease and as a result, its series field is weakened. Since this effect is cumulative, the generator 1 will take the entire load and drive generator 2 as a motor. Under such conditions, the current in the two machines will be in the direction shown in Fig. (3.16) (ii). After machine 2 changes from a generator to a motor, the current in the shunt field will remain in the same direction, but the current in the armature and series field will reverse.

Thus the magnetising action, of the series field opposes that of the shunt field. As the current taken by the machine 2 increases, the demagnetizing action of series field becomes greater and the resultant field becomes weaker. The resultant field will finally become zero and at that time machine 2 will short circuit machine 1, opening the breaker of either or both machines.

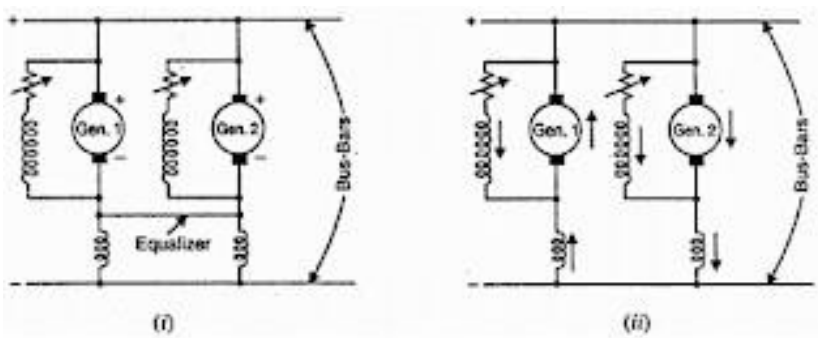

Fig. (3.16)

Fig: Parallel operation of compound generators

When the equalizer bar is used, a stabilizing action exists? And neither machine tends to take the entire load. To consider this, suppose that current delivered by generator 1 increase. The increased current will not only pass through the series field of generator 1 but also through the equalizer bar and series field of generator 2.Therefore, the voltage of both the machines increases and the generator 2 will take a part of the load.

PARALLEL OPERATION OF DC SERIES GENERATOR

The interesting thing about the parallel operation of DC series generator is that DC series generators are not usually employed for supply of power. Instead DC series motors are arranged in parallel to operate as DC series generators during Electric Braking.

- Series generators are rarely used in industry for supplying loads. Some applications like electric braking may employ them and operate two or more series generates in parallel.
- The excitation of the machine I increase, increasing the load current delivered. As the total current is I the current supplied by machine II reduces, so also its excitation and induced emf.

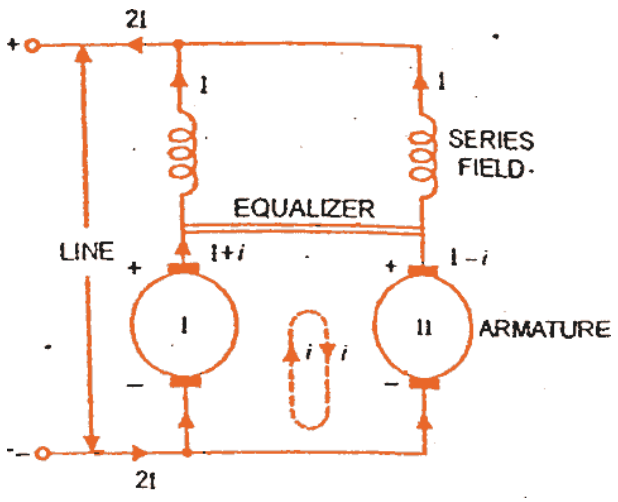

Fig: Parallel operation of Series generators

- Thus machine I takes greater and greater fraction of the load current with machine II shedding its load. Ultimately the current of machine II becomes negative and it also loads the first machine.
- Virtually there is a short circuit of the two sources, the whole process is thus highly unstable. One remedy is for a problem as this is to make the two fields immune to the circulating current between the machines.
- With the equalizer present, a momentary disturbance does not put the two machines out of action.
- A tendency to supply a larger current by a machine strengthens the field of the next machine and increases its induced emf . This brings in stable conditions for operation rapidly.

Use of Equalizer Bars:

Here comes the use of equalizer bars in the parallel operation of DC series generators. The possibility of reversal of either machine can be prevented by preventing the flow of circulating current produced due to inequalities of induced emfs of the machines through the series field winding.

- This Aim can be achieved by connecting a heavy copper bar of negligible resistance across the two machines as shown in the figure.
- Now the circulating current does not affect the field winding, but it get confined to the armature and the equalizing bars.
- Now if the armature current increases, the terminal voltage drop occurs and the original condition is restored.

Cross connection of Field windings:

If the field coils are cross-connected when the series motors are connected in parallel, then any increase in the current of the armature of generator 1, the increased current flows occurs through the field coil of generator 2. This increases the electromotive force of generator, which opposes the change in load sharing trying to stabilize the operation of the two generators at the original operating condition itself. Thus it will give more positive and better operation than equalizer connection.

1)

Comparison of Lap and Wave Type Winding

Sr. No.	Lap winding	Wave winding
1.	Number of parallel paths (A) = Poles (P)	Number of parallel paths (A) = 2 (always)
2.	Number of brush sets required is equal to number of poles.	Number of brush sets required is always equal to two.
3.	Preferable for high current, low voltage capacity generators.	Preferable for high voltage, low current capacity generators.
4.	Normally used for generators of capacity more than 500 A.	Preferred for generators of capacity less than 500 A.

2)

Example *A d.c. shunt generator has shunt field winding resistance of 100 Ω. It is supplying a load of 5 kW at a voltage of 250 V. If its armature resistance is 0.22 Ω calculate the induced e.m.f. of generator.*

Solution : Consider shunt generator as shown in the Fig. 3.9.

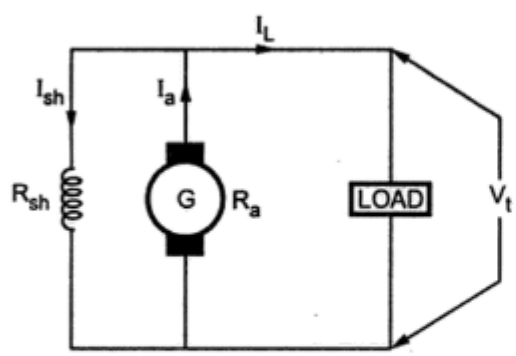

Fig. 3.9

$$I_a = I_L + I_{sh}$$

$$I_{sh} = \frac{V_t}{R_{sh}}$$

Now $V_t = 250$ V

and $R_{sh} = 100\ \Omega$

$$\therefore \quad I_{sh} = \frac{250}{100} = 2.5 \text{ A}$$

Load power = 5 kW.

$$\therefore \quad P = V_t \times I_L$$

$$\therefore \quad I_L = \frac{P}{V_t} = \frac{5 \times 10^3}{250} = 20 \text{ A}$$

$$\therefore \quad I_a = I_L + I_{sh} = 20 + 2.5 = 22.5 \text{ A}$$

Now $E = V_t + I_a R_a$ (neglect V_{brush})

3)

Causes of Failure to Excite Self Excited Generator

The causes of failure, the method of detection and the corresponding remedy are given in the Table 3.1.

Sr. No.	Cause	Method of detection	Remedy
1.	Absence of residual magnetism due to ageing.	Zero reading on voltmeter after rotating armature.	Operate the generator as separately excited first and then as a self excited.
2.	Wrong field winding connections. Due to this, flux gets produced in opposite direction to residual flux. So residual flux cancels the main flux.	Voltmeter reading decreases rather than increasing as generator is started.	Interchange the field connections.
3.	Field resistance is more than the critical resistance.	Voltmeter shows zero reading.	Reduce the resistance of field circuit using proper field divertor.
4.	Generator is driven in opposite direction.	This wipes out the residual flux and fails to excite.	Drive the generator in proper direction.

4)

Critical Field Resistance in D.C. Shunt Generator

Consider the magnetisation characteristics of a d.c. shunt generator shown in the Fig. 3.14.

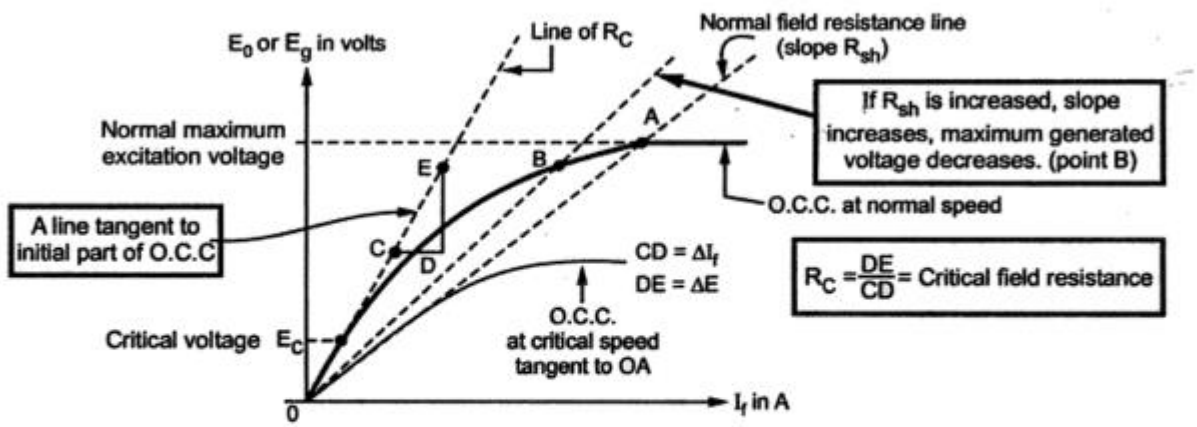

Fig. 3.14 Concept of critical resistance

The Fig. 3.14 shows that generator voltage builds in step till point A. This point is intersection of field resistance line with the open circuit characteristics (O.C.C.). The voltage corresponding to point A is the maximum voltage it can generate. If the slope of field resistance line is reduced by decreasing the field resistance, the maximum voltage generator can build will be higher than that corresponding to point A. Similarly if the slope of field resistance line is increased by increasing the field resistance, the maximum

5)

Example *A separately excited generator when running at 1200 r.p.m. supplies a current of 200 A at 125 V to a circuit of constant resistance. What will be the current when the speed drops to 1000 r.p.m. if the field current is unaltered ? Armature resistance is 0.04 Ω and the total voltage drop at the brushes is 2 V. Ignore the change in armature reaction.* **[JNTU, May-2004 (Set-1, 4), Nov.-2008 (Set-1)]**

Solution : $N_1 = 1200$ r.p.m., $I_{a1} = 200$ A, $V_{t1} = 125$ V, $N_2 = 1000$ r.p.m., $R_a = 0.04\ \Omega$

For separately excited generator with constant field current,

$$E_g \propto N$$

$$\therefore \quad \frac{E_{g1}}{E_{g2}} = \frac{N_1}{N_2}$$

Now $\quad E_{g1} = V_{t1} + I_{a1} R_a + \text{Brushdrop} = 125 + 200 \times 0.04 + 2$

$$= 135 \text{ V}$$

$$\therefore \quad \frac{135}{E_{g2}} = \frac{1200}{1000}$$

$$\therefore \quad E_{g2} = 112.5 \text{ V}$$

But $\quad E_{g2} = V_{t2} + I_{a2} R_a + \text{Brush drop} \quad \ldots(1)$

For the load of constant resistance,

$$R_L = \frac{V_{t1}}{I_{a1}} = \frac{V_{t2}}{I_{a2}} \quad \ldots I_L = I_a \text{ due to separately excited}$$

$$\therefore \quad R_L = \frac{125}{200} = \frac{V_{t2}}{I_{a2}}$$

$$\therefore \quad V_{t2} = 0.625\ I_{a2} \quad \ldots(2)$$

Using in (1), $\quad 112.5 = 0.625\ I_{a2} + I_{a2} \times 0.04 + 2$

$$\therefore \quad 0.665\ I_{a2} = 110.5$$

$$\therefore \quad I_{a2} = \mathbf{166.165\ A} \quad \ldots\text{New current}$$

Example : *In a 110 V, d.c. compound generator, the resistance of the armature, shunt field and series field are 0.06 Ω, 25 Ω and 0.04 Ω respectively. The load consists of 200 lamps each rated at 55 W, 110 V. Find the total e.m.f. generated and the armature current when the machine is connected in (a) long shunt and (b) short shunt.*

[JNTU, May-2004 (Set-2), Nov.-2008 (Set-1)]

Solution : a) Long shunt compound

$$V_t = 110 \text{ V}$$

Each lamp $\quad P = 55 \text{ W} = V_t I$

$$\therefore \quad I / \text{lamp} = \frac{55}{110} = 0.5 \text{ A}$$

$$\therefore \quad \text{Total } I_L = 200 \text{ lamps} \times 0.5$$

$$= 100 \text{ A}$$

$$I_{sh} = \frac{V_t}{R_{sh}} = \frac{110}{25}$$

$$= 4.4 \text{ A}$$

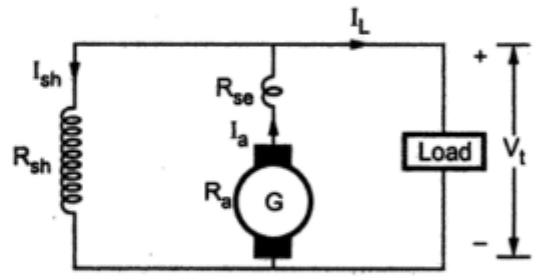

Fig. 3.29

$$\therefore \quad I_a = I_L + I_{sh} = \mathbf{104.4 \text{ A}}$$

$$E_g = V_t + I_a R_a + I_a R_{se} = 110 + 104.4\,[0.06 + 0.04]$$

$$= \mathbf{120.44 \text{ V}}$$ ...Generated e.m.f.

b) Short shunt compound

The load current remains same

$$I_{sh} = \frac{V_t + I_L R_{se}}{R_{sh}}$$

$$= \frac{110 + 100 \times 0.04}{25}$$

$$= 4.56 \text{ A}$$

$$\therefore \quad I_a = I_L + I_{sh}$$

$$= \mathbf{104.56 \text{ A}}$$

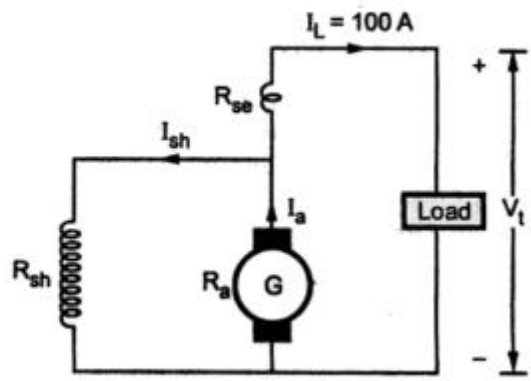

Fig. 3.30

$$\therefore \quad E_g = V_t + I_a R_a + I_L R_{se} = 110 + 104.56 \times 0.06 + 100 \times 0.04$$

$$= \mathbf{120.2736 \text{ V}}$$ ...Generated e.m.f.

UNIT III

DC MOTORS AND TESTING

WORKING PRINCIPLE OF A DC MOTOR

The DC motor is the device which converts the direct current into the mechanical work. It works on the principle of Lorentz Law, which states that "the current carrying conductor placed in a magnetic and electric field experience a force". And that force is called the Lorentz force. The Fleming left-hand rule gives the direction of the force.

Fleming Left Hand Rule

If the thumb, middle finger and the index finger of the left hand are displaced from each other by an angle of 90°, the middle finger represents the direction of the magnetic field. The index finger represents the direction of the current, and the thumb shows the direction of forces acting on the conductor.

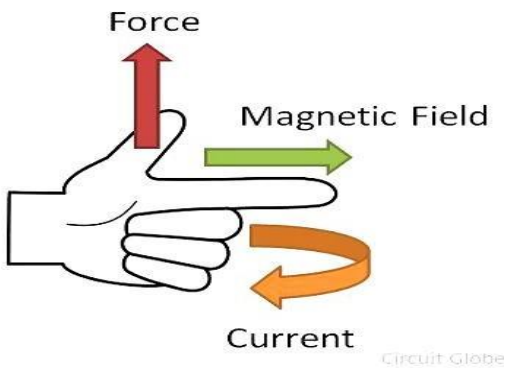

Fig: Flemings left hand rule

The formula calculates the magnitude of the force,

$$F = BIl \quad \text{newton}$$

Before understanding the working of DC motor first, we have to know about their construction. The armature and stator are the two main parts of the DC motor. The armature is the rotating part, and the stator is their stationary part. The armature coil is connected to the DC supply.

The armature coil consists the commutators and brushes. The commutators convert the AC induces in the armature into DC and brushes transfer the current from rotating part of the motor to the stationary external load. The armature is placed between the north and south pole of the permanent or electromagnet.

For simplicity, consider that the armature has only one coil which is placed between the magnetic field shown below in the figure A. When the DC supply is given to the armature coil the current starts flowing through it. This current develops their own field around the coil. Figure B shows the field induces around the coil.

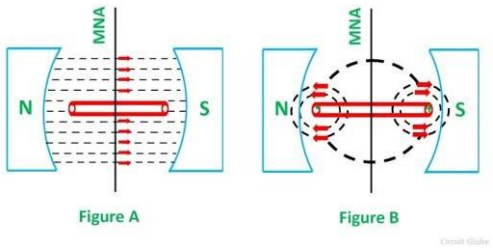

Fig: magnetic field induces around the coil.

By the interaction of the fields (produces by the coil and the magnet), resultant field develops across the conductor. The resultant field tends to regain its original position, i.e. in the axis of the main field. The field exerts the force at the ends of the conductor, and thus the coil starts rotating.

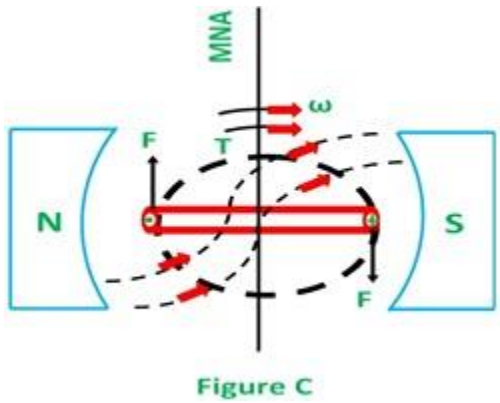

Fig: Field produced due to poles alone

Let the field produces by the main field be F_m, and this field rotates in the clockwise direction. When the current flows in the coil, they produce their own magnetic field says F_r. The field F_r tries to come in the direction of the main field. Thereby, the torque act on the armature coil.

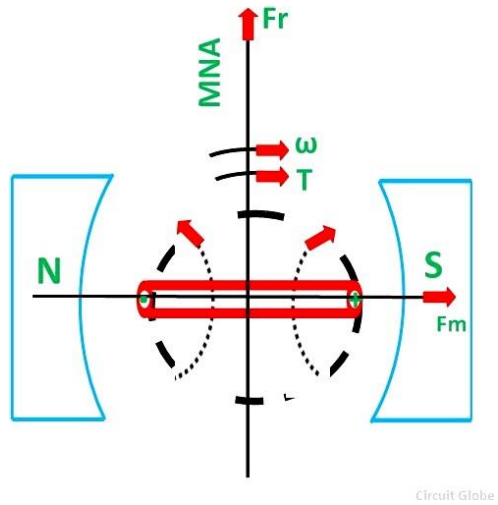

Fig: Field produced due to conductors alone

The actual DC motor consists a large number of armature coils. The speed of the motor is directly proportional to the number of coils used in the motor. These coils are kept under the impact of the magnetic field.

The one end of the conductors are kept under the influence of north pole, and the other end is kept under the influence of the South pole. The current enters into the armature coil through the north pole and move outwards through the south pole. When the coil moves from one brush to another, at the same time the polarity of the coil also changes. Thus, the direction of the force or torque acting on the coil remains same.

The torque induces in the coil become zero when the armature coil is perpendicular to the main field. The zero torque means the motor stops rotating. For solving this problem, the number of armature coil is used in the rotor. So if one of their coils is perpendicular to the field, then the other coils induce the torque. And the rotor moves continuously.

Also, for obtaining the continuous torque, the arrangement is kept in such a way that whenever the coils cut the magnetic neutral axis of the magnet the direction of current in the coils become reversed. This can be done with the help of the commutator.

Back Emf and its Significance in DC Motor

When a dc voltage V is applied across the motor terminals, the armature starts rotating due to the torque developed in it.

As the armature rotates, armature conductors cut the pole magnetic field, therefore, as per law of electromagnetic induction, an emf called ***back emf*** is induced in them.

The back emf (also called counter emf) is given by

$$E_b = \frac{P\Phi ZN}{60A}$$

where, P=number of poles of dc motor

Φ= flux per pole

Z=total number of armature conductors

N=armature speed

A=number of parallel paths in armature winding

As all other parameters are constant, therefore, $E_b \propto N$

As per Lenz's law, "the induced emf always opposes the cause of its production". Here, the cause of generation of back emf is the rotation of armature. Rotation of armature is due to armature torque. Torque is due to armature current and armature current is due to supply dc voltage V. Therefore, the ultimate cause of production of E_b is the supply voltage V.

Therefore, back emf is always directed opposite to supply voltage V.

Significance of back emf in dc motor

(1) As the back emf opposes supply voltage V, therefore, supply voltage has to force current through the armature against the back emf, to keep armature rotating. The electric work done in overcoming and causing the current to flow against the back emf is converted into mechanical energy developed in the armature.

It follows, therefore, that energy conversion in a dc motor is only possible due to the production of back emf.

Mechanical power developed in the armature = EbIa

(2) Back emf makes dc motor a self-regulating motor i.e Eb makes motor to adjust Ia automatically as per the load torque requirement. Lets see how.

From the motor figure,

$$I_a = \frac{V - E_b}{R_a}$$

V and Ra are fixed, therefore, armature current Ia dpends on back emf, which in turn depends on speed of the motor.

(a) when the motor is running at no-load, small torque (Ta=KIa) is required by the motor to overcome friction and windage. Therefore, a small current is drawn by the motor armature and the back emf is almost equal to the supply voltage.

(b) If the motor is suddenly loaded, the load torque beomes greater than the armature torque and the motor starts to slow down. As motor speed decreases, back emf decreases and therefore, armature current starts increasing. With increasing Ia , armature torque increases and at some point it becomes equal to the load torque. At that moment, motor stops slowing down and keeps running at this new speed.

(c) If the load on the motor is suddenly reduced, the driving torque becomes more than the load torque and the motor starts accelerating. As the motor speed increases, back emf increases and therefore, armature current decreases. Due to this reducing armature current, armature developed torque decreases and at some point becomes equal to the load torque. That point onwards, motor will stop accelerating and will start rotating uniformly at this new slightly increased speed.

So, this shows how important is back emf in dc motor. Without back emf, the electromagnetic energy conversion would not have been possible at the first place.

Power Equation of a D.C. Motor

The voltage equation of a d.c. motor is given by,

$$V = E_b + I_a R_a$$

Multiplying both sides of the above equation by I_a we get,

$$V I_a = E_b I_a + I_a^2 R_a$$

This equation is called power equation of a d.c. motor.

VI_a = Net electrical power input to the armature measured in watts.

$I_a^2R_a$ = Power loss due the resistance of the armature called armature copper loss.

So difference between VI_a and $I_a^2R_a$ i.e. input - losses gives the output of the armature.

So E_b Ia is called electrical equivalent of gross mechanical power developed by the armature.

This is denoted as P_m.

∴ Power input to the armature - Armature copper loss = Gross mechanical power developed in the armature.

Condition for Maximum Power

For a motor from power equation it is known that,

P_m = Gross mechanical power developed = E_b Ia

= VIa - I_a^2Ra

For maximum P_m, $dP_m/dI_a = 0$

∴ $0 = V - 2I_aRa$

∴ $I_a = V/2Ra$ i.e. $I_aRa = V/2$

Substituting in voltage equation,

$V = E_b + I_aRa = E_b + (V/2)$

∴ $E_b = V/2$..... Condition for maximum power

Key Point : This is practically impossible to achieve as for this, current required is much more than its normal rated value. Large heat will be produced and efficiency of motor will be less than 50 %.

TORQUE EQUATION OF A DC MOTOR

When a DC machine is loaded either as a motor or as a generator, the rotor conductors carry current. These conductors lie in the magnetic field of the air gap. Thus, each conductor experiences a force. The conductors lie near the surface of the rotor at a common radius from its centre. Hence, a torque is produced around the circumference of the rotor, and the rotor starts rotating.

When the machine operates as a generator at a constant speed, this torque is equal and opposite to that provided by the prime mover. When the machine is operating as a motor, the torque is transferred to the shaft of the rotor and drives the mechanical load. The expression is same for the generator and motor.

When the current carrying current is placed in the magnetic field, a force is exerted or it which exerts turning moment or torque F x r. This torque is produced due to the electromagnetic effect, hence is called **Electromagnetic torque.** The torque which is produced in the armature is not fully used at the shaft for doing the useful work. Some part of it where lost due to mechanical losses. The torque which is used for doing useful work in known as the shaft torque.

Since,

$$V = E_b + I_a R_a \quad \ldots\ldots..(1)$$

Multiplying the equation (1) by I_a we get

$$VI_a = E_b I_a + I_a^2 R_a \quad \ldots\ldots..(2)$$

Where,

VI_a is the electrical power input to the armature.

$I^2_a R_a$ is the copper loss in the armature.

We know that,

Total electrical power supplied to the armature = Mechanical power developed by the armature + losses due to armature resistance

Now, the mechanical power developed by the armature is Pm.

$$P_m = F_b I_a \ldots\ldots.(3)$$

Also, the mechanical power rotating armature can be given regarding torque T and speed n.

$$P_m = \omega T = 2\pi\, nT \quad \ldots\ldots.(4)$$

Where n is in revolution per seconds (rps) and T is in Newton-Meter.

Hence,

$$2\pi\, nT = E_b I_a \quad \text{or}$$

$$T = \frac{E_b I_a}{2\pi n}$$

But,

$$E_b = \frac{\varphi ZNP}{60\ A}$$

Where N is the speed in revolution per minute (rpm) and

$$n = \frac{N}{60}$$

Where, n is the speed in (rps).

Therefore,

$$E_b = \frac{\varphi ZnP}{A}$$

So, the torque equation is given as

$$T = \frac{\varphi ZP}{2\pi A} . I_a$$

For a particular DC Motor, the number of poles (P) and the number of conductors per parallel path (Z/A) are constant.

$$T = K\varphi I_a$$

Where,

$$K = \frac{ZP}{2\pi A} \quad \text{or}$$

$$T \propto \varphi I_a \ldots \ldots (5)$$

Thus, from the above equation (5) it is clear that the torque produced in the armature is directly proportional to the flux per pole and the armature current. Moreover, the direction of electromagnetic torque developed in the armature depends upon the current in armature conductors. If either of the two is reversed the direction of torque produced is reversed and hence the direction of rotation. But when both are reversed, and direction of torque does not change.

Shaft Torque

In a DC Motor whole of the electromagnetic torque (T) developed in the armature is not available on the shaft. A part of it is lost to overcome the iron and mechanical (friction and windage) losses. Therefore, shaft torque (T_{sh}) is somewhat less than the torque developed in the armature.

Definition: Thus, in the case of DC motors, the actual torque available at the shaft for doing useful mechanical work is known as **Shaft Torque.** It is so called because it is available on the shaft of the motor. It is represented by the symbol T_{sh}. The output of the motor is given by the equation shown below where T_{sh} is the shaft torque in r.p.s and the N is the rotation of the motor in r.p.m. The shaft torque is expressed as

$$Output = T_{sh} \times 2\pi N$$

$$T_{sh} = \frac{Outputs\ in\ watts}{2\pi N}\ N-m\ in\ r.p.s$$

$$T_{sh} = \frac{Outputs\ in\ watts}{2\pi N/60}\ N-m\ in\ r.p.m$$

$$T_{sh} = \frac{60}{2\pi}\frac{Output}{N} = 9.55\frac{Output}{N}\ N-m\ in\ r.p.s$$

The difference between the armature torque and the shaft torque ($T_a - T_{sh}$) is known as the lost torque and is due to the formation of the torque.

Brake Horse Power (B.H.P)

In the case of the motor, the mechanical power available at the shaft is known as Brake Horse Power. If T_{sh} is the shaft torque in Newton Meter and N is the speed in r.p.m then,

$$\text{Useful output power} = \omega T_{sh} = \frac{2\pi N T_{sh}}{60} \quad \text{watts}$$

$$\text{Output in B.H.P} = \frac{2\pi N T_{sh}}{60 \times 735.5} \quad \ldots\ldots (1)$$

The output brake horsepower is given by the equation (1) shown above.

TYPES OF DC MOTOR

A Direct Current Motor, DC is named according to the connection of the field winding with the armature. Mainly there are two types of DC Motors. First, one is Separately Excited DC Motor and Self-excited DC Motor. The self-excited motors are further classified as Shunt wound or shunt motor, Series wound or series motor and Compound wound or compound motor.

The dc motor converts the electrical power into mechanical power is known as dc motor. The construction of the dc motor and generator are same. But the dc motor has the wide range of speed and good speed regulation which in electric traction.The working principle of the dc motor is based on the principle that the current carrying conductor is placed in the magnetic field and a mechanical force experience by it.

The DC motor is generally used in the location where require protective enclosure, for example, drip-proof, the fireproof, etc. according to the requirements. The detailed description of the various types of the motor is given below.

Separately Excited DC Motor

As the name signifies, the field coils or field windings are energized by a separate DC source as shown in the circuit diagram shown below.

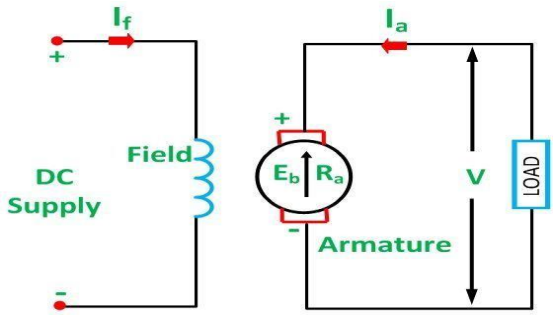

Separately Excited DC Motor

Self Excited DC Motor

As the name implies self-excited, hence, in this type of motor, the current in the windings is supplied by the machine or motor itself. Self-excited DC Motor is further divided into shunt wound, and series wound motor. They are explained below in detail.

Shunt Wound Motor

This is the most common types of DC Motor. Here the field winding is connected in parallel with the armature as shown in the figure below.

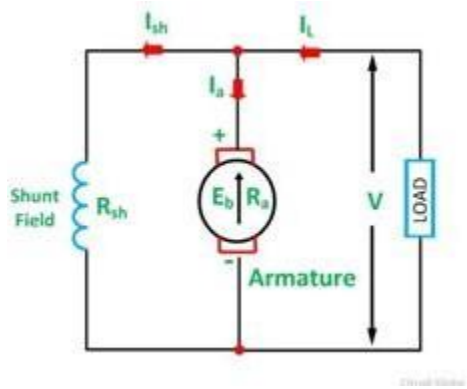

Shunt Wound DC Motor

The current, voltage and power equations for a shunt motor are written as follows.

By applying KCL at the junction A in the above figure.

The sum of the incoming currents at A = Sum of the outgoing currents at A.

$$I = I_a + I_{sh} \ldots\ldots\ldots (1)$$

Where,

I is the input line current

Ia is the armature current

Ish is the shunt field current

Equation (1) is the current equation.

The voltage equations are written by using Kirchhoff's voltage law (KVL) for the field winding circuit.

$$V = I_{sh}R_{sh} \ldots\ldots..(2)$$

For armature winding circuit the equation will be given as

$$V = E + I_aR_a \ldots\ldots\ldots(3)$$

The power equation is given as

Power input = mechanical power developed + losses in the armature + loss in the field.

$$VI = P_m + I_a^2R_a + I_{sh}^2R_{sh} \ldots\ldots\ldots..(4)$$

$$VI = P_m + I_a^2R_a + VI_{sh}$$

$$P_m = VI - VI_{sh} - I_a^2R_a = V(I - I_{sh}) - I_a^2R_a$$

$$P_m = VI_a - I_a^2R_a = (V - I_aR_a)I_a$$

$$P_m = EI_a \ldots\ldots\ldots(5)$$

Multiplying equation (3) by Ia we get the following equations.

$$VI_a = EI_a + I_a^2R_a \ldots\ldots\ldots(6)$$

$$VI_a = P_m + I_a^2R_a \ldots\ldots\ldots(7)$$

Where,

VI_a is the electrical power supplied to the armature of the motor.

Series Wound Motor

In the series motor, the field winding is connected in series with the armature winding. The connection diagram is shown below.

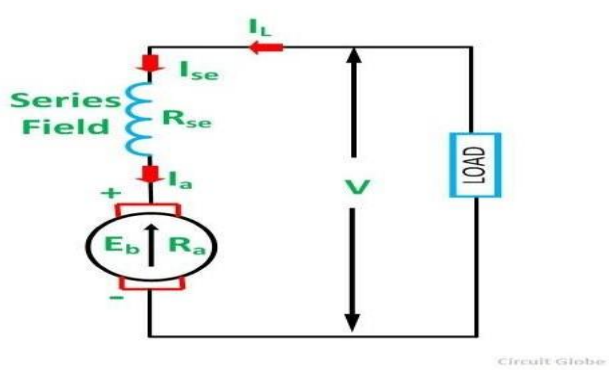

Series Wound Motor

By applying the KCL in the above figure

$$I = I_{se} = I_a$$

Where,

I_{se} is the series field current

The voltage equation can be obtained by applying KVL in the above figure

$$V = E + I\,(R_a + R_{se}) \ldots\ldots\ldots (8)$$

The power equation is obtained by multiplying equation (8) by I we get

$$VI = EI + I^2\,(R_a + R_{se}) \ldots\ldots\ldots (9)$$

Power input = mechanical power developed + losses in the armature + losses in the field

$$VI = P_m + I^2R_a + I^2R_a \ldots\ldots.. (10)$$

Comparing the equation (9) and (10), we will get the equation shown below.

$$P_m = EI \ldots\ldots\ldots (11)$$

Compound Wound Motor

A DC Motor having both shunt and series field windings is called a **Compound Motor**. The connection diagram of the compound motor is shown below.

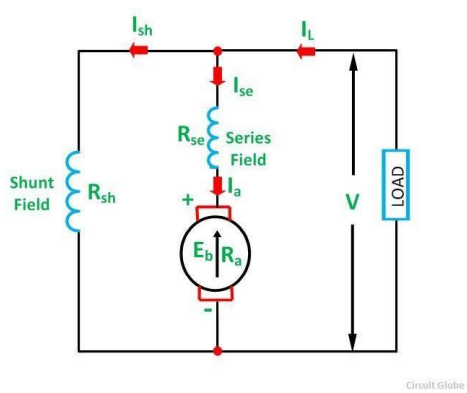

Compound Motor

The compound motor is further subdivided as **Cumulative Compound** Motor and **Differential Compound** Motor. In cumulative compound motor the flux produced by both the windings is in the same direction, i.e.

$$\varphi_r = \varphi_{sh} + \varphi_{se}$$

In differential compound motor, the flux produced by the series field windings is opposite to the flux produced by the shunt field winding, i.e.

$$\varphi_r = \varphi_{sh} - \varphi_{se}$$

The positive and negative sign indicates that direction of the flux produced in the field windings.

CHARACTERISTICS OF DC MOTORS

Generally, three characteristic curves are considered important for DC motors which are,

(i) Torque vs. armature current,
(ii) (ii) Speed vs. armature current and
(iii) (iii) Speed vs. torque.

These are explained below for each type of DC motor. These characteristics are determined by keeping the following two relations in mind.

$$\mathbf{T_a \propto \phi . I_a} \text{ and } \mathbf{N \propto E_b/\phi}$$

These above equations can be studied at - emf and torque equation of dc machine. For a DC motor, magnitude of the back emf is given by the same emf equation of a dc generator i.e. Eb = PϕNZ / 60A. For a machine, P, Z and A are constant, therefore, N ∝ Eb/ϕ

Characteristics Of DC Series Motors

Torque Vs. Armature Current (T_a-I_a)

This characteristic is also known as electrical characteristic. We know that torque is directly proportional to the product of armature current and field flux, Ta ∝ ϕ.Ia. In DC series motors, field winding is connected in series with the armature, i.e. Ia = If. Therefore, before magnetic saturation of the field, flux ϕ is directly proportional to Ia. Hence, before magnetic saturation Ta α Ia2. Therefore, the Ta-Ia curve is parabola for smaller values of Ia.

After magnetic saturation of the field poles, flux ϕ is independent of armature current Ia. Therefore, the torque varies proportionally to Ia only, T ∝ Ia.Therefore, after magnetic saturation, Ta-Ia curve becomes a straight line.

The shaft torque (Tsh) is less than armature torque (Ta) due to stray losses. Hence, the curve Tsh vs Ia lies slightly lower.

In DC series motors, (prior to magnetic saturation) torque increases as the square of armature current, these motors are used where high starting torque is required.

Speed Vs. Armature Current (N-Ia)

We know the relation, N ∝ Eb/ϕ

For small load current (and hence for small armature current) change in back emf Eb is small and it may be neglected. Hence, for small currents speed is inversely proportional to ϕ. As we know, flux is directly proportional to Ia, speed is inversely proportional to Ia. Therefore, when armature current is very small the speed becomes dangerously high. That is why a series motor should never be started without some mechanical load.

But, at heavy loads, armature current Ia is large. And hence, speed is low which results in decreased back emf Eb. Due to decreased Eb, more armature current is allowed.

Speed Vs. Torque (N-Ta)

This characteristic is also called as mechanical characteristic. From the above two characteristics of DC series motor, it can be found that when speed is high, torque is low and vice versa.

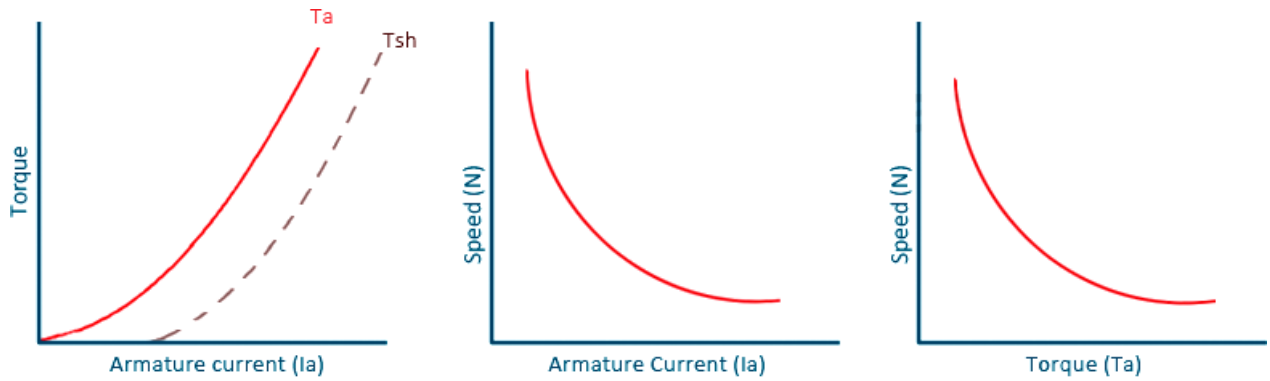

Characteristics of DC series motor

Characteristics Of DC Shunt Motors

Torque Vs. Armature Current (Ta-Ia)

In case of DC shunt motors, we can assume the field flux ϕ to be constant. Though at heavy loads, ϕ decreases in a small amount due to increased armature reaction. As we are neglecting the change in the flux ϕ, we can say that torque is proportional to armature current. Hence, the Ta-Ia characteristic for a dc shunt motor will be a straight line through the origin.

Since heavy starting load needs heavy starting current, shunt motor should never be started on a heavy load.

Speed Vs. Armature Current (N-Ia)

As flux ϕ is assumed to be constant, we can say N ∝ Eb. But, as back emf is also almost constant, the speed should remain constant. But practically, ϕ as well as Eb decreases with increase in load. Back emf Eb decreases slightly more than ϕ, therefore, the speed decreases slightly. Generally, the speed decreases only by 5 to 15% of full load speed. Therefore, a shunt motor can be assumed as a constant speed motor. In speed vs. armature current characteristic in the following figure, the straight horizontal line represents the ideal characteristic and the actual characteristic is shown by the dotted line.

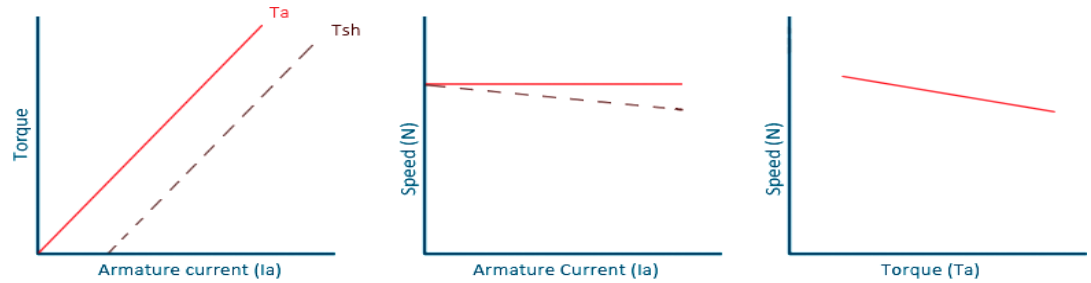

Characteristics of DC shunt motor

Characteristics Of DC Compound Motor

DC compound motors have both series as well as shunt winding. In a compound motor, if series and shunt windings are connected such that series flux is in direction as that of the shunt flux then the motor is said to be cumulatively compounded. And if the series flux is opposite to the direction of the shunt flux, then the motor is said to be differentially compounded. Characteristics of both these compound motors are explained below.

(a) Cumulative compound motor

Cumulative compound motors are used where series characteristics are required but the load is likely to be removed completely. Series winding takes care of the heavy load, whereas the shunt winding prevents the motor from running at dangerously high speed when the load is suddenly removed. These motors have generally employed a flywheel, where sudden and temporary loads are applied like in rolling mills.

(b) Differential compound motor

Since in differential field motors, series flux opposes shunt flux, the total flux decreases with increase in load. Due to this, the speed remains almost constant or even it may increase slightly with increase in load ($N \propto E_b/\phi$). Differential compound motors are not commonly used, but they find limited applications in experimental and research work.

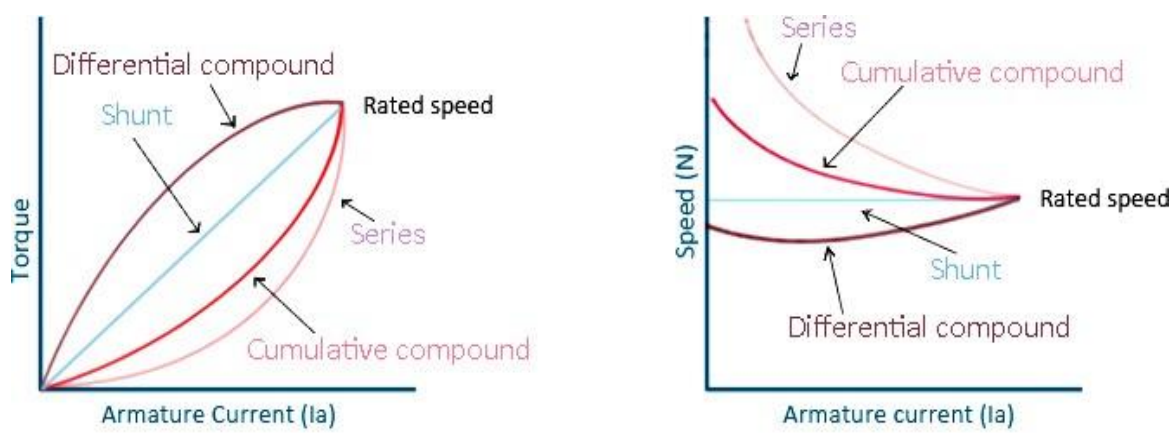

Characteristics of DC compound motor

SPEED CONTROL OF DC MOTOR:

The dc motor converts the mechanical power into dc electrical power. One of the most important features of the dc motor is that their speed can easily be control according to the requirement by using simple methods. Such type of control is impossible in an AC motor.

The concept of the speed regulation is different from the speed control. In speed regulation, the speed of the motor changes naturally whereas in dc motor the speed of the motor changes manually by the operator or by some automatic control device. The speed of the DC Motor is given by the relation shown below.

The equation (1) that the speed is dependent upon the supply voltage V, the armature circuit resistance R_a and the field flux ϕ, which is produced by the field current.

$$N = \frac{V - I_a R_a}{k\varphi} \quad \dots\dots\dots\dots (1)$$

For controlling the speed of DC Motor, the variation in voltage, armature resistance and field flux is taken into consideration. There are three general methods of speed control of a DC Motor. They are as follows.

1. Variation of resistance in the armature circuit.This method is called Armature Resistance or Rheostatic control.
2. Variation in field flux.This method is known as Field Flux Control.
3. Variation in applied voltage.This method is also known as Armature Voltage Control.

The detailed discussion of the various method of controlling the speed is given below.

Armature Resistance Control of DC Motor

Shunt Motor

The connection diagram of a shunt motor of the armature resistance control method is shown below. In this method, a variable resistor R_e is put in the armature circuit. The variation in the variable resistance does not effect the flux as the field is directly connected to the supply mains.

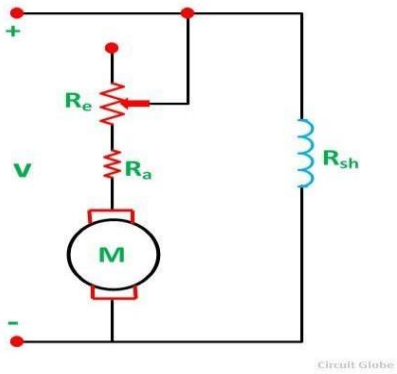

Fig: Connection diagram of a shunt motor of the armature resistance control method

The **speed current characteristic** of the shunt motor is shown below.

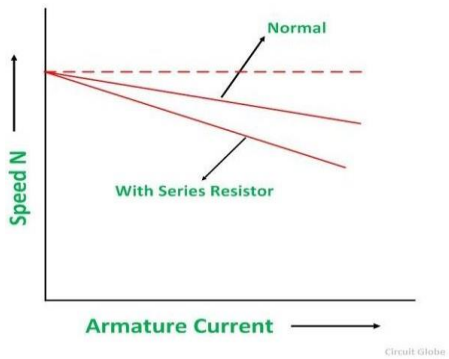

Fig: Speed current characteristic of the shunt motor

Series Motor:

Now, let us consider a connection diagram of speed control of the DC Series motor by the armature resistance control method.

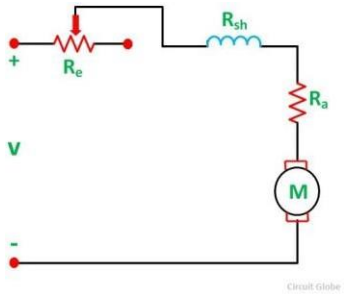

Fig: Diagram of speed control of the DC Series motor

By varying the armature circuit resistance, the current and flux both are affected. The voltage drop in the variable resistance reduces the applied voltage to the armature, and as a result, the speed of the motor is reduced.

The **speed–current characteristic** of a series motor is shown in the figure below.

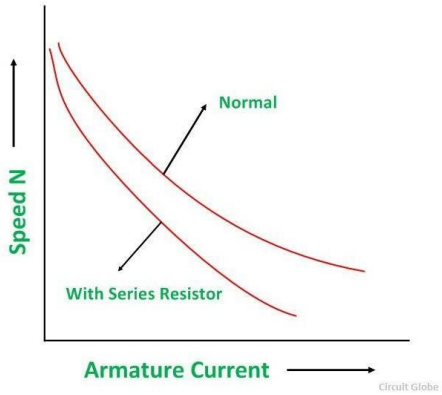

Fig: Speed–current characteristic of a series motor

When the value of variable resistance Re is increased, the motor runs at a lower speed. Since the variable resistance carries full armature current, it must be designed to carry continuously the full armature current.

Disadvantages of Armature Resistance Control Method

- A large amount of power is wasted in the external resistance Re.
- Armature resistance control is restricted to keep the speed below the normal speed of the motor and increase in the speed above normal level is not possible by this method.
- For a given value of variable resistance, the speed reduction is not constant but varies with the motor load.
- This speed control method is used only for small motors.

Field Flux Control Method of DC Motor

Flux is produced by the field current. Thus, the speed control by this method is achieved by control of the field current.

Shunt Motor

In a Shunt Motor, the variable resistor R_C is connected in series with the shunt field windings as shown in the figure below. This resistor R_C is known as a **Shunt Field Regulator.**

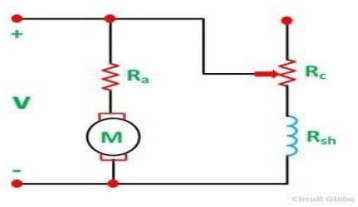

Fig: Shunt Field Regulator

The shunt field current is given by the equation shown below.

$$I_{sh} = \frac{V}{R_{sh} + R_C}$$

The connection of RC in the field reduces the field current, and hence the flux is also reduced. This reduction in flux increases the speed, and thus, the motor runs at speed higher than the normal speed. Therefore, this method is used to give motor speed above normal or to correct the fall of speed because of the load.

The **speed-torque curve** for shunt motor is shown below.

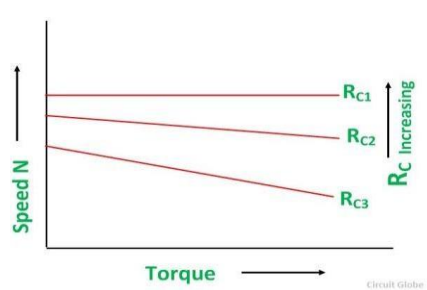

Fig: speed-torque curve for shunt motor

Series Motor

In a series motor, the variation in field current is done by any one method, i.e. either by a diverter or by a tapped field control.

By Using a Diverter:

A variable resistance R_d is connected in parallel with the series field windings as shown in the figure below.

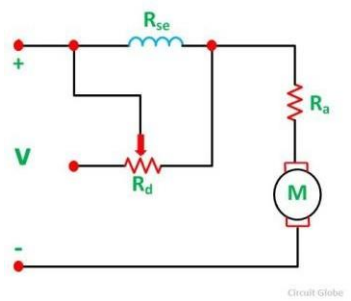

Fig: Diverter is connected in parallel with the series field windings

The parallel resistor is called a Diverter. A portion of the main current is diverted through a variable resistance R_d. Thus, the function of a diverter is to reduce the current flowing through the field winding. The reduction in field current reduces the amount of flux and as a result the speed of the motor increases.

Tapped Field Control:

The second method used in a series motor for the variation in field current is by tapped field control. The connection diagram is shown below.

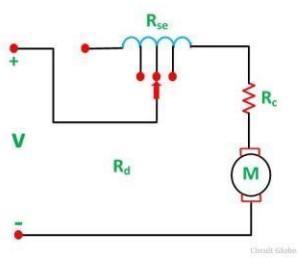

Fig: Tapped Field Control

Here the ampere turns are varied by varying the number of field turns. This type of arrangement is used in an electric traction system. The speed of the motor is controlled by the variation of the field flux. The speed-torque characteristic of a series motor is shown below.

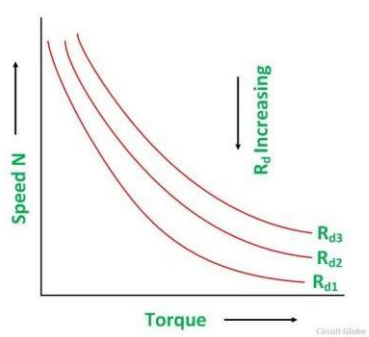

Fig: Speed-torque characteristic

Advantages of Field Flux Control

The following are the advantages of the field flux control method.

- This method is easy and convenient.
- As the shunt field is very small, the power loss in the shunt field is also small.

The flux cannot usually be increased beyond its normal values because of the saturation of the iron. Therefore, speed control by flux is limited to the weakening of the field, which gives an increase in speed. This method is applicable over only to a limited range because if the field is weakened too much, there is a loss of stability.

Armature Voltage Control of DC Motor

In armature voltage control method the speed control is achieved by varying the applied voltage in the armature winding of the motor. This speed control method is also known as **Ward Leonard Method**, which is discussed in detail under the topic Ward Leonard Method or Armature Voltage Control.

Ward Leonard Method Of Speed Control Or Armature Voltage Control

Ward Leonard Method of speed control is achieved by varying the applied voltage to the armature. This method was introduced in 1891. The connection diagram of the Ward Leonard method of speed control of a DC shunt motor is shown in the figure below.

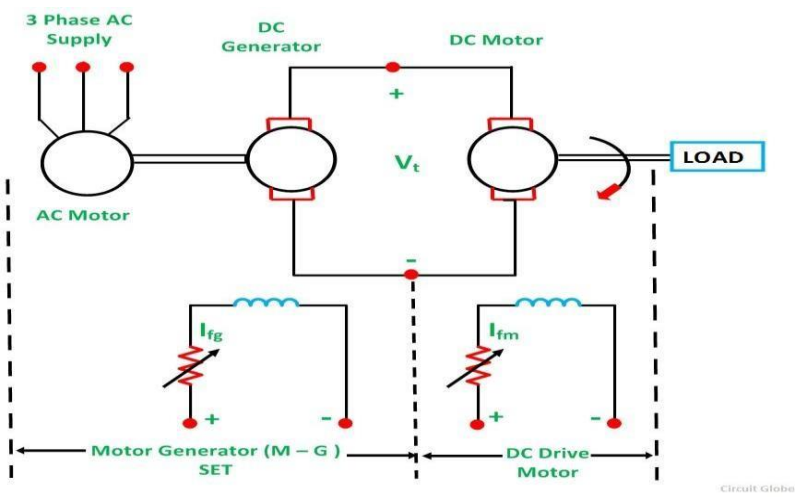

In the above system, M is the main DC motor whose speed is to be controlled, and G is a separately excited DC generator.The generator G is driven by a 3 phase driving motor which may be an induction motor or a synchronous motor. The combination of AC driving motor and the DC generator is called the **Motor-Generator (M-G) set.**

The voltage of the generator is changed by changing the generator field current. This voltage when directly applied to the armature of the main DC motor, the speed of the motor M changes. The motor field current I_{fm} is kept constant so that the motor field flux ϕ_m also remains constant. While the speed of the motor is controlled, the motor armature current Ia is kept equal to its rated value.

The generated field current I_{fg} is varied such that the armature voltage $V_t$changes from zero to its rated value. The speed will change from zero to the base speed. Since the speed control is carried out with the

rated current Ia and with the constant motor field flux, a constant torque is directly proportional to the armature current, and field flux up to rated speed is obtained. The product of torque and speed is known as power, and it is proportional to speed. Thus, with the increase in power, speed increases automatically.

The **Torque and Power Characteristic** is shown in the figure below.

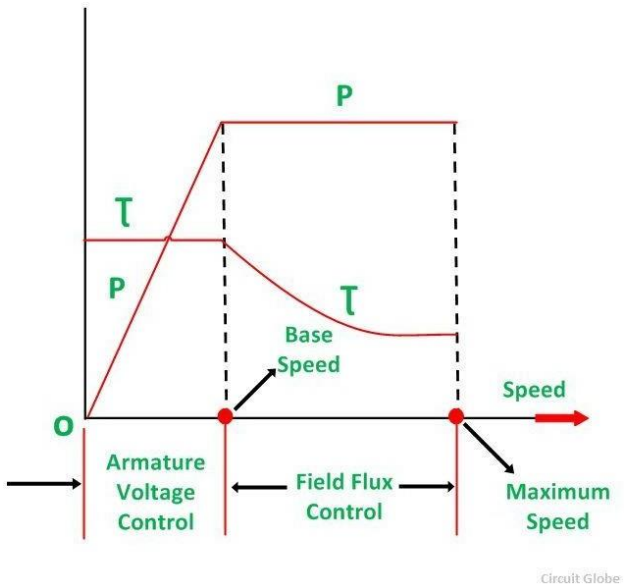

Hence, with the armature voltage control method, constant torque and variable power drive is obtained from speed below the base speed. The Field flux control method is used when the speed is above the base speed. In this mode of operation, the armature current is maintained constant at its rated value, and the generator voltage Vt is kept constant.

The motor field current is decreased and as a result, the motor field flux also decreases.This means that the field is weakened to obtain the higher speed. Since VtIa and EIa remain constant, the electromagnetic torque is directly proportional to the field flux ϕm and the armature current Ia. Thus, if the field flux of the motor is decreased the torque decreases.

Therefore, the torque decreases, as the speed increases. Thus, in the field control mode, constant power and variable torque are obtained for speeds above the base speed. When the speed control over a wide range is required, a combination of armature voltage control and field flux control is used. This combination permits the ratio of maximum to minimum speed available speeds to be 20 to 40. For closed loop control, this range can be extended up to 200.

The driving motor can be an induction or synchronous motor. An induction motor operates at a lagging power factor. The synchronous motor may be operated at a leading power factor by over-excitation of its field. Leading reactive power is generated by over excited synchronous motor. It compensates for the lagging reactive power taken by other inductive loads. Thus, the power factor is improved.

A Slip ring induction motor is used as p prime mover when the load is heavy and intermittent. A flywheel is mounted on the shaft of the motor. This scheme is known as Ward Leonard-Ilgener scheme. It prevents heavy fluctuations in supply current.

When the Synchronous motor is acting as a driving motor, the fluctuations cannot be reduced by mounting a flywheel on its shaft, because the synchronous motor always operates at a constant speed. In another form of Ward Leonard drive, non-electrical prime movers can also be used to drive the DC generator.

For example – In DC electric locomotive, DC generator is driven by a diesel engine or a gas turbine and ship propulsion drives. In this system, Regenerative braking is not possible because energy cannot flow in the reverse direction in the prime mover.

Advantages of Ward Leonard Drives

The main advantages of the Ward Leonard drive are as follows:-

- Smooth speed control of DC motor over a wide range in both the direction is possible.
- It has an inherent braking capacity.
- The lagging reactive volt-amperes are compensated by using an overexcited synchronous motor as the drive and thus, the overall power factor improves.
- When the load is intermittent as in rolling mills, the drive motor is an induction motor with a flywheel mounted to smooth out the intermittent loading to a low value.

Drawbacks of Classical Ward Leonard System

The Ward Leonard system with rotating Motor Generator sets has following drawbacks.

- The Initial cost of the system is high as there is a motor generator set installed, of the same rating as that of the main DC motor.
- Larger size and weight.
- Requires large floor area
- Costly foundation
- Maintenance of the system is frequent.
- Higher losses.
- Lower efficiency.
- The drive produces more noise.
-

Applications of Ward Leonard Drives

The Ward Leonard drives are used where a smooth speed control of the DC motors over a wide range in both the directions is required. Some of the examples are as follows:-

- Rolling mills
- Elevators
- Cranes
- Paper mills
- Diesel-electric locomotives
- Mine hoists

Solid State Control or Static Ward Leonard System

Now a days Static Ward Leonard system is mostly used. In this system, the rotating motor-generator (M-G) set is replaced by a solid state converter to control the speed of the DC motor. Controlled Rectifiers and choppers are used as a converter.

In the case of an AC supply, controlled rectifiers are used to convert fixed AC supply voltage into a variable AC supply voltage. In the case of DC supply, choppers are used to obtain variable DC voltage from the fixed DC voltage.

STARTING OF DC MOTORS

A **starter** is a device to start and accelerate a motor. A controller is a device to start the motor, control and reverse the speed of the DC motor and stop the motor. While starting the DC motor, it draws the heavy current which damages the motor. The starter reduces the heavy current and protects the system from damage.

Need of Starters for DC Motors

The dc motor has no back EMF. At the starting of the motor, the armature current is controlled by the resistance of the circuit. The resistance of the armature is low, and when the full voltage is applied at the standstill condition of the motor, the armature current becomes very high which damage the parts of the motor.

Because of the high armature current, the additional resistance is placed in the armature circuit at starting. The starting resistance of the machine is cut out of the circuit when the machine gains it speeds. The armature current of a motor is given by

$$I_a = \frac{V - E}{R_a} \quad \dots\dots\dots \quad (1)$$

Thus, I_a depends upon E and R_a, if V is kept constant. When the motor is first switched ON, the armature is stationary. Hence, the back EMF E_b is also zero. The initial starting armature current I_{as} is given by the equation shown below.

$$I_{as} = \frac{V - 0}{R_a} = \frac{V}{R_a} \quad \dots\dots\dots\dots (2)$$

Since, the armature resistance of a motor is very small, generally less than one ohm. Therefore, the starting armature current I_{as} would be very large. **For example –** if a motor with the armature resistance of 0.5 ohms is connected directly to a 230 V supply, then by putting the values in the equation (2) we will get.

$$I_{as} = \frac{V}{R_a} = \frac{230}{0.5} = 460 \quad \text{Ampere}$$

This large current would damage the brushes, commutator and windings.

As the motor speed increases, the back EMF increases and the difference (V – E) go on decreasing. This results in a gradual decrease of armature current until the motor attains its stable speed and the corresponding back EMF. Under this condition, the armature current reaches its desired value. Thus, it is found that the back EMF helps the armature resistance in limiting the current through the armature.

Since at the time of starting the DC Motor, the starting current is very large. At the time of starting of all DC Motors, except for very small motors, an extra resistance must be connected in series with the armature. This extra resistance is added so that a safe value of the motor is maintained and to limit the starting current until the motor has attained its stable speed.

The series resistance is divided into sections which are cut out one by one, as the speed of the motor rises and the back EMF builds up. The extra resistance is cut out when the speed of the motor builds up to its normal value.

3 POINT STARTER

3 Point Starter is a device whose main function is starting and maintaining the speed of the DC shunt motor. The 3 point starter connects the resistance in series with the circuit which reduces the high starting current and hence protects the machines from damage. Mainly there are three main points or terminals in 3 point starter of DC motor. They are as follows

- **L** is known as Line terminal, which is connected to the positive supply.
- **A** is known as the armature terminal and is connected to the armature windings.
- **F** or **Z** is known as the field terminal and is connected to the field terminal windings.

The **3 Point DC Shunt Motor** Starter is shown in the figure below

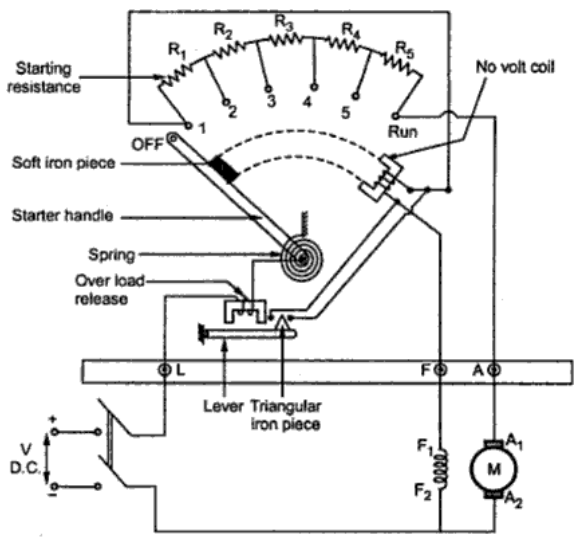

3 point Starter

It consists of a graded resistance R to limit the starting current. The handle H is kept in the **OFF** position by a spring S. The handle H is manually moved, for starting the motor and when it makes contact with resistance stud one the motor is said to be in the **START** position. In this initial start position, the field winding of the motor receives the full supply voltage, and the armature current is limited to a certain safe value by the resistance ($R = R_1 + R_2 + R_3 + R_4$).

Working of 3 Point Starter

The starter handle is now moved from stud to stud, and this builds up the speed of the motor until it reaches the **RUN** position. The Studs are the contact point of the resistance. In the RUN position, three main points are considered. They are as follows.

- The motor attains the full speed.
- The supply is direct across both the windings of the motor.
- The resistance R is completely cut out.

The handle H is held in RUN position by an electromagnet energised by a **no volt trip coil (NVC)**. This no volt trip coil is connected in series with the field winding of the motor. In the event of switching OFF, or when the supply voltage falls below a predetermined value, or the complete failure of supply while the motor is running, NVC is energised. The handle is released and pulled back to the OFF position by the action of the spring. The current to the motor is cut off, and the motor is not restarted without a resistance R in the armature circuit. The no voltage coil also provides protection against an open circuit in the field windings.

The No Voltage Coil (NVC) is called **NO-VOLT** or **UNDERVOLTAGE** protection of the motor. Without this protection, the supply voltage might be restored with the handle in the RUN position. The full line voltage is directly applied to the armature. As a result, a large amount of current is generated.

The other protective device incorporated in the starter is the overload protection. The **Over Load Trip Coil (OLC)** and the **No Voltage Coil (NVC**) provide the overload protection of the motor. The overload coil is made up of a small electromagnet, which carries the armature current. The magnetic pull of the Overload trip coil is insufficient to attract the strip P, for the normal values of the armature current

When the motor is overloaded, that is the armature current exceeds the normal rated value, P is attracted by the electromagnet of the OLC and closes the contact aa thus, the No Voltage Coil is short-circuited, shown in the figure of 3 Point Starter. As a result, the handle H is released, which returns to the OFF position, and the motor supply is cut off.

To stop the motor, the starter handle should never be pulled back as this would result in burning the starter contacts. Thus, to stop the motor, the main switch of the motor should be opened.

Drawbacks of a 3 Point Starter

The following drawbacks of a 3 point starter are as follows:-

- The 3 point starter suffers from a serious drawback for motors with a large variation of speed by adjustment of the field rheostat.
- To increase the speed of the motor, the field resistance should be increased. Therefore, the current through the shunt field is reduced.
- The field current may become very low because of the addition of high resistance to obtain a high speed.
- A very low field current will make the holding electromagnet too weak to overcome the force exerted by the spring.
- The holding magnet may release the arm of the starter during the normal operation of the motor and thus, disconnect the motor from the line. This is not a desirable action.

Hence, to overcome this difficulty, the 4 Point Starter is used.

4 POINT STARTER

A 4 Point Starter is almost similar in functional characteristics like 3 Point Starter. In the absence of back EMF, the 4 Point Starter acts as a current limiting device while starting of the DC motor. 4 Point Starter also acts a protecting device.

The basic difference in 4 Point Starter as compared to 3 Point Starter is that in this a holding coil is removed from the shunt field circuit. This coil after removing is connected across the line in series with a current limiting resistance R. The studs are the contact points of the resistance represented by 1, 2, 3, 4, 5 in the figure below. The schematic connection diagram of a 4 Point Starter is shown below.

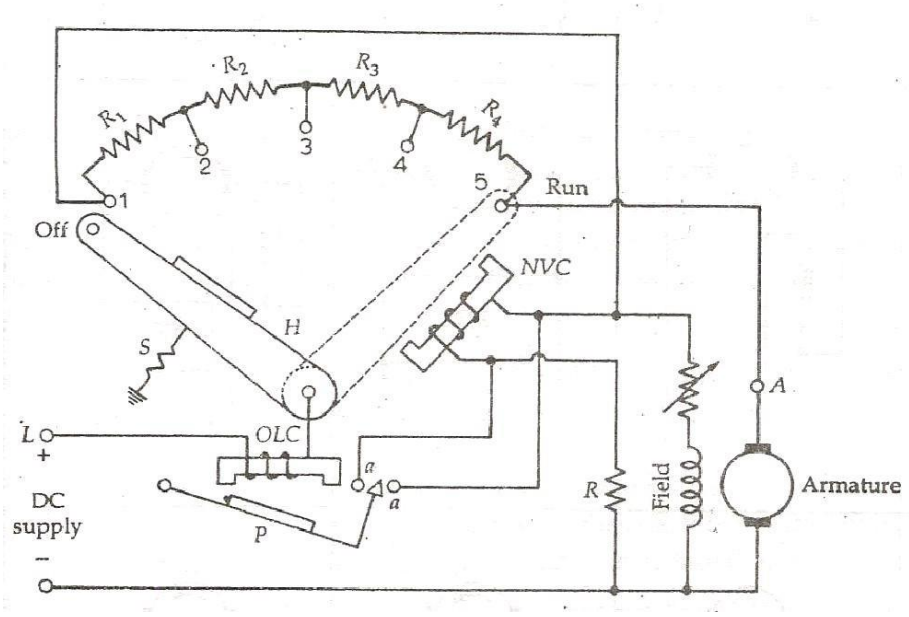

Fig: 4 Point Starter

The above arrangement forms three parallel circuits. They are as follows:-

- Armature, starting the resistance and the shunt field winding.
- A variable resistance and the shunt field winding.
- Holding coil and the current limiting resistance.

With the above three arrangements of the circuit, there will be no effect on the current through the holding coil if there is any variation in speed of the motor or any change in field current of the motor. This is because the two circuits are independent of each other.

The only limitation or the drawback of the 4 point starter is that it cannot limit or control the high current speed of the motor. If the field winding of the motor gets opened under the running condition, the field current automatically reduces to zero. But as some of the residual flux is still present in the motor, and we know that the flux is directly proportional to the speed of the motor. Therefore, the speed of the motor increases drastically, which is dangerous and thus protection is not possible. This sudden increase in the speed of the motor is known as High-Speed Action of the Motor.

Nowadays automatic push button starters are also used. In the automatic starters, the ON push button is pressed to connect the current limiting starting resistors in series with the armature circuit. As soon as the full line voltage is available to the armature circuit, this resistor is gradually disconnected by an automatic controlling arrangement.

The circuit is disconnected when the OFF button is pressed. Automatic starter circuits have been developed using electromagnetic contactors and time delay relays. The main advantage of the automatic starter is that it enables even the inexperienced operator to start and stop the motor without any difficulty.

LOSSES IN DC MACHINE

The losses that occur in a DC Machine is divided into five basic categories. The various losses are Electrical or Copper losses (I^2R losses), Core losses or Iron losses, Brush losses, Mechanical losses, Stray load losses. These losses are explained below in detail.

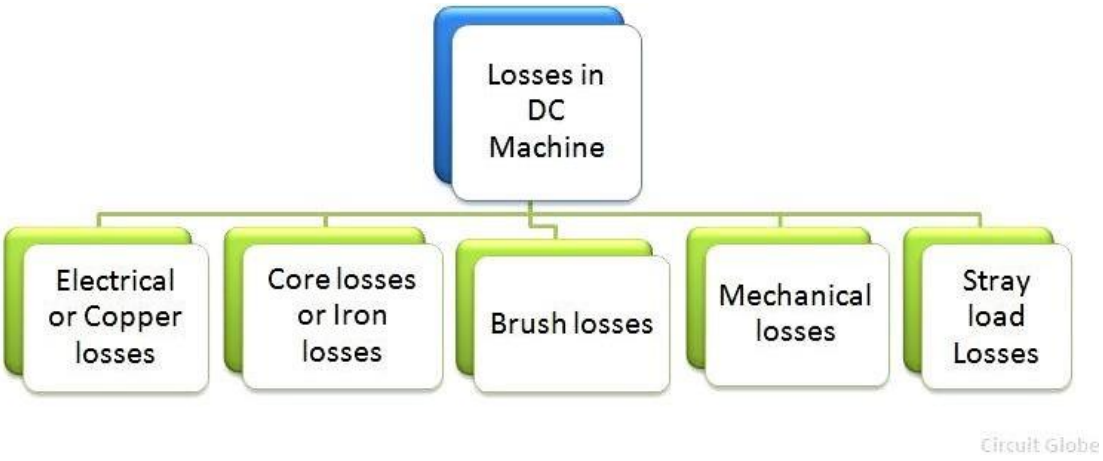

Fig: Classification of losses in DC machnes

Electrical or Copper Losses in dc machine

These losses are also known as Winding losses as the copper loss occurs because of the resistance of the windings. The ohmic loss is produced by the current flowing in the windings. The windings that are present in addition to the armature windings are the field windings, interpoles and compensating windings.

Armature copper losses = $I_a^2R_a$ where I_a is armature current, and Ra is the armature resistance. These losses are about 30 percent of the total full load losses.

In shunt machine, the Copper loss in the shunt field is $I^2_{sh}R_{sh}$, where I_{sh} is the current in the shunt field, and R_{sh} is the resistance of the shunt field windings. The shunt regulating resistance is included in R_{sh}.

In a series machine, the copper loss in the series windings is $I^2_{se}R_{se}$, where, I_{se} is the current through the series field windings, and R_{se} is the resistance of the series field windings.

In a Compound machine, both the shunt and the series field losses occur. These losses are almost 20 percent of the full load losses.

Copper losses in the interpole windings are written as $I_a^2R_i$ where R_i is the resistance of the interpole windings.

Copper loss in the compensating windings if any is $I_a^2R_c$ where R_c is the resistance of compensating windings.

Magnetic Losses or Core Losses or Iron Losses in dc machine

The core losses are the hysteresis and eddy current losses. These losses are considered almost constant as the machines are usually operated at constant flux density and constant speed. These losses are about 20 percent of the full load losses.

Brush Losses in dc machine

Brush losses are the losses taking place between the commutator and the carbon brushes. It is the power loss at the brush contact point. The brush drop depends upon the brush contact voltage drop and the armature current Ia. It is given by the equation shown below.

The voltage drop occurring over a large range of armature currents, across a set of brushes is approximately constant If the value of brush voltage drop is not given than it is usually assumed to be about 2 volts. Thus, the brush drop loss is taken as $2I_a$.

Mechanical Losses in dc machine

The losses that take place because of the mechanical effects of the machines are known as mechanical losses. Mechanical losses are divided into bearing friction loss and windage loss. The losses occurring in the moving parts of the machine and the air present in the machine is known as Windage losses. These losses are very small.

Stray Losses in dc machine

These losses are the miscellaneous type of losses. The following factors are considered in stray load losses.

- The distortion of flux because of armature reaction.
- Short circuit currents in the coil, undergoing commutation.

These losses are very difficult to determine. Therefore, it is necessary to assign the reasonable value of the stray loss. For most machines, stray losses are taken by convention to be one percent of the full load output power.

EFFICIENCY OF DC GENERATOR

Efficiency is simply defined as the ratio of output power to the input power. Let R = total resistance of the armature circuit (including the brush contact resistance, at series winding resistance, inter-pole winding resistance and compensating winding resistance). The efficiency of DC generator is explained below in the line diagram.

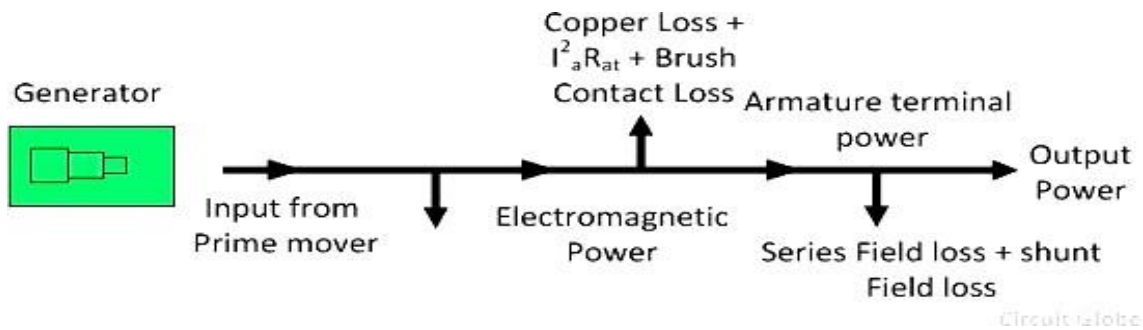

Fig: Power flow diagram

- I is the output current
- I_{sh} is the current through the shunt field
- I_a is the armature current = I + I_{sh}
- V is the terminal voltage.

Total copper loss in the armature circuit = $I_a^2R_{at}$

Power loss in the shunt circuit = V_{Ish} (this includes the loss in the shunt regulating resistance).

Mechanical losses = friction loss of bearings + friction loss at a commutator + windage loss.

Core losses = hysteresis loss + eddy current loss

Stray loss = mechanical loss + core loss

The sum of the shunt field copper loss and stray losses may be considered as a combined fixed (constant) loss that does not vary with the load current I.

Therefore, the constant losses (in shunt and compound generators) = stray loss + shunt field copper losses.

$$\text{Total Losses} = I_a^2R_{at} + p_k + V_{BD}I_a$$

SWINBURNE'S TEST

Swinburne's Test is an indirect method of testing of DC machines. In this method the losses are measured separately and the efficiency at any desired load is predetermined. Machines are tested for finding out

losses, efficiency and temperature rise. For small machines direct loading test is performed. For large shunt machines, indirect methods are used like Swinburne's or Hopkinson's test.

The machine is running as a motor at rated voltage and speed. The connection diagram for DC shunt machine is shown in the figure below.

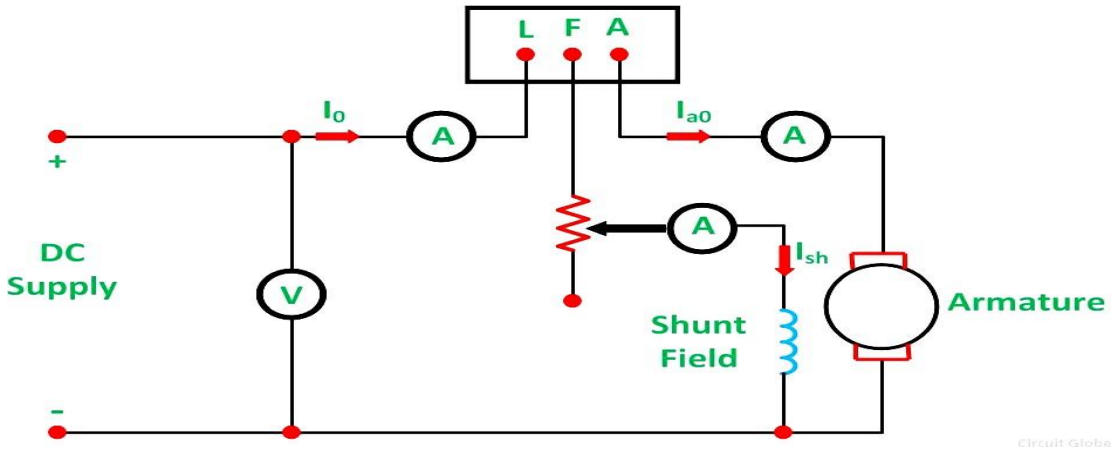

Fig: Swinburne's Test

Let

V be the supply voltage

I_0 is the no-load current

I_{sh} is the shunt field current

Therefore, no load armature current is given by the equation shown below.

$$I_{a0} = I_0 - I_{sh}$$

No-load input = VI_0

The no-load power input to the machine supplies the following, as given below.

- Iron loss in the core
- Friction losses in the bearings and commutators.
- Windage loss
- Armature copper loss at no load.

When the machine is loaded, the temperature of the armature winding and the field winding increases due to I^2R losses. For calculating I^2R losses hot resistances should be used. A stationary measurement of resistances at room temperature of t degree Celsius is made by passing current through the armature and then field from a low voltage DC supply. Then the heated resistance, allowing a temperature rise of 50^0C is found. The equations are as follows:-

$$R_{t1} = R_0 (1 + \alpha_0 t_1)$$

$$R_{t1+50^0} = R_0 [1 + \alpha_0 (t_1 + 50^\circ)]$$

Where, α_0 is the temperature coefficient of resistance at 0^0C

Therefore,

$$R_{t1+50^0} = R_{t1} \frac{1 + \alpha_0 (t_1 + 50^\circ)}{1 + \alpha_0 t_1}$$

Stray loss = iron loss + friction loss + windage loss = input at no load – field copper loss – no load armature copper loss

$$= VI_0 - p_f - p_{a0} = p_s$$

Also, constant losses

$$p_c = \text{no load input} - \text{no load armature copper loss}$$

$$p_c = p_s + p_f$$

If the constant losses of the machine are known, its efficiency at any other load can be determined as follows.

Let I be the load current at which efficiency is required.

Efficiency when the machine is running as a Motor.

$$\text{Motor input} = VI$$

$$\text{Armature copper loss} = I_a^2 R_a = (I - I_{sh})^2 R_a$$

$$\text{Constant losses} = p_c$$

Therefore, total losses is given as

$$\text{Total losses} = (I - I_{sh})^2 R_a + p_c$$

The efficiency of the motor is given below.

$$\eta_m = \frac{\text{input} - \text{losses}}{\text{input}}$$

$$\eta_m = \frac{VI - (I - I_{sh})^2 R_a + p_c}{VI}$$

Efficiency when the machine is running as a Generator.

$$\text{Generator output} = VI$$

$$\text{Armature current} = I_a = I + I_{sh}$$

$$\text{Armature copper loss} = (I + I_{sh})^2 R_a$$

$$\text{Constant losses} = p_c$$

Therefore, total losses is given as

$$\text{Total losses} = (I + I_{sh})^2 R_a + p_c$$

The efficiency of the generator is given below.

$$\eta_g = \frac{\text{output}}{\text{output} + \text{losses}}$$

$$\eta_g = \frac{VI}{VI + (I + I_{sh})^2 R_a + p_c}$$

Advantages of Swinburne's Test:

The main advantages of the Swinburne's test are as follows:-

- The power required to test a large machine is small. Thus, this method is an economical and convenient method of testing of DC machines.
- As the constant loss is known the efficiency can be predetermined at any load.

Disadvantages of Swinburne's Test:

- Change in iron loss is not considered at full load from no load. Due to armature reaction flux is distorted at full load and, as a result, iron loss is increased.
- As the Swinburne's test is performed at no load. Commutation on full load cannot be determined whether it is satisfactory or not and whether the temperature rise is within the specified limits or not.

Limitations of Swinburne's Test:

- Machines having a constant flux are only eligible for Swinburne's test. For examples – shunt machines and level compound generators.
- Series machines cannot run on light loads, and the value of speed and flux varies greatly. Thus, the Swinburne's Test are not applicable for series machines
-

BRAKE TEST ON DC SHUNT MOTOR:

Brake test is a method of finding efficiency of dc motors. We took dc shunt motor as running machine. Brake test also called as direct loading test of testing the motor because loading will be applied directly on shaft of the motor by means of a belt and pulley arrangement.

Test Requirements:

1. DC shunt motor
2. Water-cooled pulley
3. Spring balance

Procedure of Brake Test on DC Shunt Motor:

1. By adjusting the handle of the pulley take different readings of the spring balance.
2. The tension in the belt can be adjusted using the handle. The tension in kg can be obtained from the spring balance readings.
3. Adjusting the load step by step till full load, number of readings can be obtained. By increasing the load is slowly, adjust to get rated load current.
4. The power developed gets wasted against the friction between belt and shaft. Due to the braking action of belt the test is called brake test.
5. The speed can be measured by tachometer. Thus all the motor characteristics can be plotted.

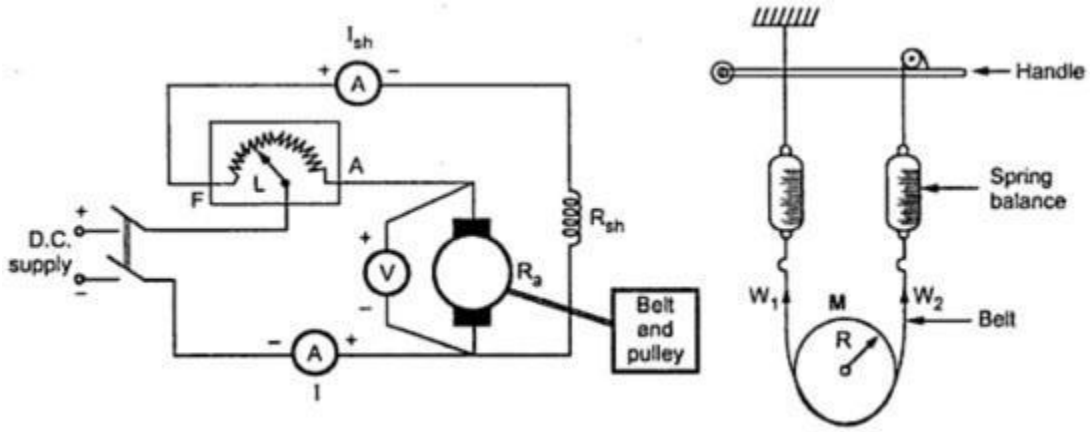

(a) Experimental setup (b) Belt and pulley arrangement

Calculation of Brake Test on DC Shunt Motor

Let R (or) r= Radius of pulley in meters

N = Speed in R.P.M.

W1 = spring balance reading on tight side in kg

W2 = spring balance reading on slack side in kg

So, net pull on the belt due to friction at the pulley is the difference between the two spring balance readings.

Net pull on the rope = (W - S) kg = (W - S) X 9.81 newtons ..... (1)

As radius R and speed N are known, the shaft torque developed can be obtained as,

Tsh = Net pull X R = (W - S) X 9.81 X R .....(2)

Now let, V = Voltage applied in volts

I = Total line current drawn in amps.

As we know V and I are input parameters of dc motors in brake test.

Then,

Pin=V.I Watts .....(3)

We have output and input. Then why late go and find the efficiency of dc shunt motor.

Efficiency (η)=Output/Input [No units]

From equation (2) & (3)

$$\text{Output power} = \frac{2\pi\, N\, T_{sh}}{60} = \frac{2\pi\, N \times (W - S) \times 9.81 \times r}{60} \quad \text{watts}$$

Advantages of Brake Test on DC Shunt Motor:

1. Actual efficiency of the motor under working conditions can be found out.
2. Brake test is simple and easy to perform.
3. It is not only for dc shunt motor, also can be performed on any type of D.C. motor.

Disadvantages of Brake Test on DC Shunt Motor:

1. In brake test due the belt friction lot of heat will be generated and hence there is large dissipation of energy.
2. Cooling arrangement is necessary to minimize the heat. Mostly in our laboratories we use water as cooling liquid.
3. Convenient only for small rated machines due to limitations regarding heat dissipation arrangements.
4. Power developed gets wasted hence brake test method is little expensive.
5. The efficiency observed is on lower side.

HOPKINSON'S TEST

Hopkinson's Test is also known as Regenerative Test, Back to Back test and Heat Run Test. In Hopkinson Test, two identical shunt machines are required which are coupled both mechanically and electrically in parallel. One is acting as a motor and another one as a generator. The input to the motor is given by the supply mains.

The mechanical output of motor drives the generator, and the electrical output of the generator is used in supplying the input to the motor. Thus, the output of each machine acts as an input to the other machine. When both the machines are running on the full load, the supply input is equal to the total losses of the machines. Hence, the power input from the supply is very small.

The **Circuit Diagram of the Hopkinson's Test** is shown in the figure below.

Supply is given and with the help of a starter, the machine M starts and work as a motor. The switch S is kept open. The field current of M is adjusted with the help of rheostat field R_M, which enables the motor to run at rated speed. Machine G acts as a generator. Since the generator is mechanically coupled to the motor, it runs at the rated speed of the motor.

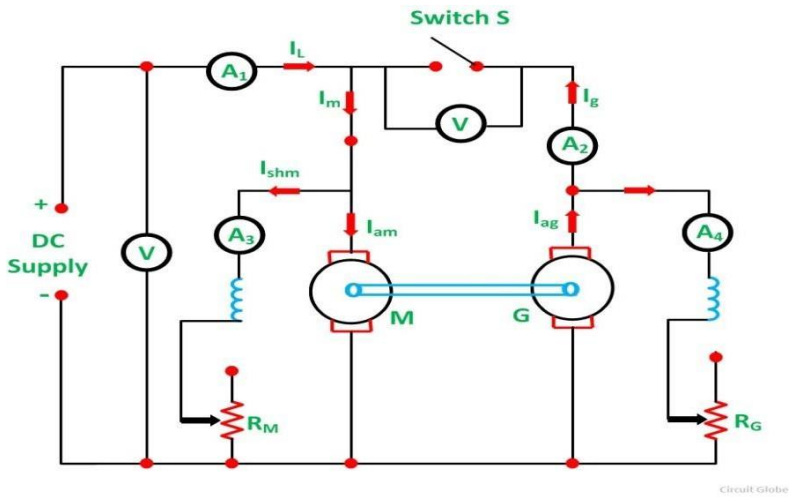

Fig: Hopkinson's Test

The excitation of the generator G is so adjusted with the help of its field rheostat R_G that the voltage across the armature of the generator is slightly higher than the supply voltage. In actual the terminal voltage of the generator is kept 1 or 2 volts higher than the supply voltage.

When the voltage of the generator is equal and of the same polarity as the of the busbar supply voltage, the main switch S is closed, and the generator is connected to the busbars. Thus, both the machines are now in parallel across the supply. Under this condition, when the machines are running parallel, the generator are said to float. This means that the generator is neither taking any current nor giving any current to the supply.

Now with the help of a field rheostat, any required load can be thrown on the machines by adjusting the excitation of the machines with the help of field rheostats.

Let,

- V be the supply voltage
- I_L is the line current
- I_m is the input current to the motor
- I_g is the input current to the generator
- I_{am} is the motor armature current
- I_{shm} is the motor shunt field current
- I_{shg} is the generator shunt field current
- R_a is the armature resistance of each machine
- R_{shm} is the motor shunt field resistance
- R_{shg} is the generator shunt field resistance
- E_g is the generator induced voltage
- E_m is the motor induced voltage or back emf

$$E_g = V + I_{ag}R_a$$

$$E_m = V - I_{am}R_a$$

Therefore,

$$E_g > E_m$$

But,

$$E_g \propto \varphi_g N \quad \text{and} \quad E_m \propto \varphi_m N$$

Hence,

$$\varphi_g > \varphi_m$$

Since the field flux is directly proportional to the field current.

$$\varphi \propto I_f$$

$$I_{shg} > I_{shm}$$

Thus, the excitation of the generator shall always be greater than that of the motor.

Calculation of the Efficiency of the Machine by Hopkinson's Test

- Power input from the supply = VI_L = total losses of both the machines
- Armature copper loss of the motor = $I^2_{am}R_a$
- Field copper loss of the motor = $I^2_{shm}R_{shm}$
- Armature copper loss of the generator = $I^2_{ag}R_a$
- Field copper loss of the generator = = $I^2_{shg}R_{shg}$

The constant losses Pc like iron, friction and windage losses are assumed to be equal and is written as given below.

Constant losses of both the machines = Power drawn from the supply – Armature and shunt copper losses of both the machines.

$$P_C = VI_L - \left(I^2_{am}R_a + I^2_{shm}R_{shm} + I^2_{ag}R_a + I^2_{shg}R_{shg}\right)$$

Assuming that the constant losses known as stray losses are divided equally between the two machines.

Total stray loss per machine = ½ P_C

Efficiency of the Generator

- Output = VI_{ag}
- Constant losses for generator is given as $P_C/2$
- Armature copper loss = $I^2_{ag}R_a$
- Field copper loss = $I^2_{shg}R_{shg}$

The Efficiency of the generator is given by the equation shown below

$$\eta_g = \frac{\text{Output}}{\text{Output} + \text{Losses}}$$

$$\eta_g = \frac{VI_{ag}}{VI_{ag} + I_{ag}^2 R_a + I_{shg}^2 R_{shg} + \frac{1}{2} P_C}$$

Efficiency of the Motor

$$\text{Input} = VI_m = V(I_{am} + I_{shm})$$

- Constant losses of the motor is given as $P_C/2$
- Armature copper loss = $I^2_{am} R_a$
- Field copper loss = $I^2_{shm} R_{shm}$

The **Efficiency** of the motor is given by the equation shown below

$$\eta_m = \frac{\text{Output}}{\text{Input}} = \frac{\text{Input} - \text{losses}}{\text{Input}}$$

$$\eta_m = \frac{V\,(I_{am} + I_{shm}) - \left(\frac{P_C}{2} + I_{am}^2 R_a + I_{shm}^2 R_{shm}\right)}{V\,(I_{am} + I_{shm})}$$

Advantages of Hopkinson's Test

The main advantages of using Hopkinson's test are as follows:-

- This method is very economical.
- The temperature rise and the commutation conditions can be checked under rated load conditions.
- Stray losses are considered, as both the machines are operated under rated load conditions.
- Large machines can be tested at rated load without consuming much power from the supply.
- Efficiency at different loads can be determined.

Disadvantage of Hopkinson's Test

The main disadvantage of this method is the necessity of two practically identical machines for performing the Hopkinson's test. Hence, this test is suitable for large DC machines.

FIELD'S TEST:

This is one of the methods of testing the D.C. series motors. Unlike shunt motors, the series motor cannot be tested by the methods which area available for shunt motors as it is impossible to run the motor on no-load. It may run at dangerously high speed on no load. In case of small series motors brake test may be employed.

The series motors are usually tested in pairs. The field test is applied to two similar series motors which are coupled mechanically. The connection diagram for the test is shown in the Fig. 1.

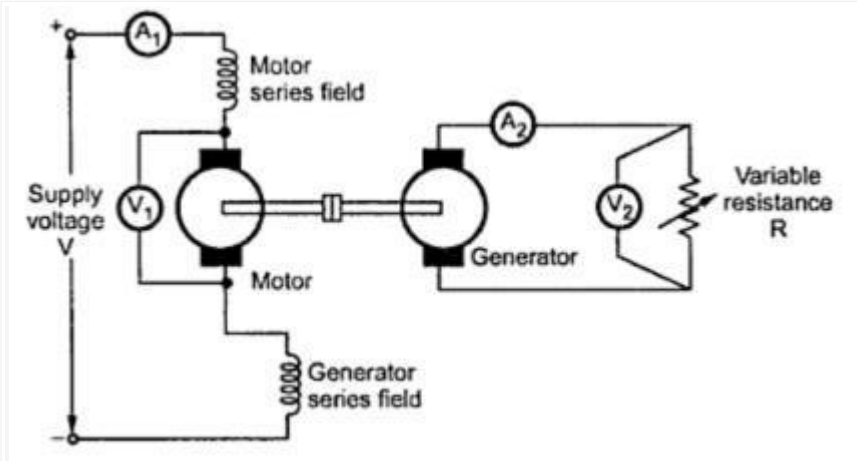

Fig. 1 Field test

As shown in the Fig. 1 one machine is made to run as a motor while the other as a generator which is separately excited. The fields of the two machines are connected in series so that both the machines are equally excited. This will make iron losses same for the two machines. The two machines are running at the same speed. The generator output is given to the variable resistance R.

The resistance R is changed until the current taken by motor reaches full load value. This will be indicated by ammeter A_1. The other readings of different meters are then recorded.

Let V = Supply voltage

I_1 = Current taken by motor

I_2 = Load current

V_2 = Terminal p.d. of generator

R_a, R_{se} = Armature and series field resistance of each machine

Power taken from supply = VI_1

Output obtained from generator = $V_2 I_2$

Total losses in both the machines, $W_T = VI_1 - V_2 I_2$

Armature copper and field losses, $W_{CU} = (R_a + 2 R_{se}) I_1^2 + I2^2 R_a$

Total stray losses = $W_T - W_{CU}$

$$\text{Stray losses per machine, } W_s = \frac{W_T - W_{cu}}{2}$$

Since the two machines are equally excited and are running at same speed the stray loses are equally divided.

For Motor;

Input to motor = $V_1 I_1$

Total losses = Aramture Cu loss + Field Cu loss + Stray loss

$= I_1^2 (R_a + R_{se}) + W_s$

Output of motor = Input - Total losses = $V_1 I_1 - [I_1^2 (Ra + R_{se}) + Ws]$

$$\text{Efficiency of motor, } \eta_m = \frac{\text{Output}}{\text{Input}}$$

$$\boxed{\eta_m = \frac{V_1 I_1 - [I_1^2 (R_a + R_{se}) + W_s}{V_1 I_1}}$$

For Generator:

Efficiency of generator is of little importance because it is running under conditions of separate excitation. Still it can be found as follows.

Output of generator = $V_2 I_2$

Field Cu loss = $I_1^2 R_{se}$

Armature Cu loss = $I_2^2 R_a$

Total losses = Armature Cu loss + Field Cu loss + Stray loss

$= I_2^2 Ra + I_1^2 R_{se} + Ws$

Input to generator = Output + Total losses = $V_2 I_2 + [I_2^2 R_a + I_1^2 R_{se} + Ws]$

$$\text{Efficiency of generator, } \eta_g = \frac{\text{Output}}{\text{Input}}$$

$$\therefore \quad \boxed{\eta_g = \frac{V_2 I_2}{V_2 I_2 + [I_2^2 R_a + I_1^2 R_{se} + W_s]}}$$

The important point to be noted is that this is not regenerative method though the two machines are mechanically coupled because the generator output is not fed back to the motor as in case of Hopkinson's test but it is wasted in load resistance.

RETARDATION TEST OR RUNNING DOWN TEST

This method is generally employed to shunt generators and shunt motors. From this method we can get stary losses. Thus if armature and shunt copper losses at any given load current are known then efficiency of a machine can be easily estimated.

The machine whose test is to be taken is run at a speed which is slightly above its normal speed. The supply to the motor is cut off while the field is kept excited. The armature consequently slows down and its kinetic energy is used in supplying the rotational or stray losses which includes iron, friction and winding loss.

If **I** is the amount of inertia of the armature ans is the angular velocity.

Kinetic energy of armature = $0.5 I\omega^2$

∴ Rotational losses, W = Rate of change of kinetic energy

$$= \frac{d}{dt}\left(\frac{1}{2} I \omega^2\right) = I\omega \frac{d\omega}{dt}$$

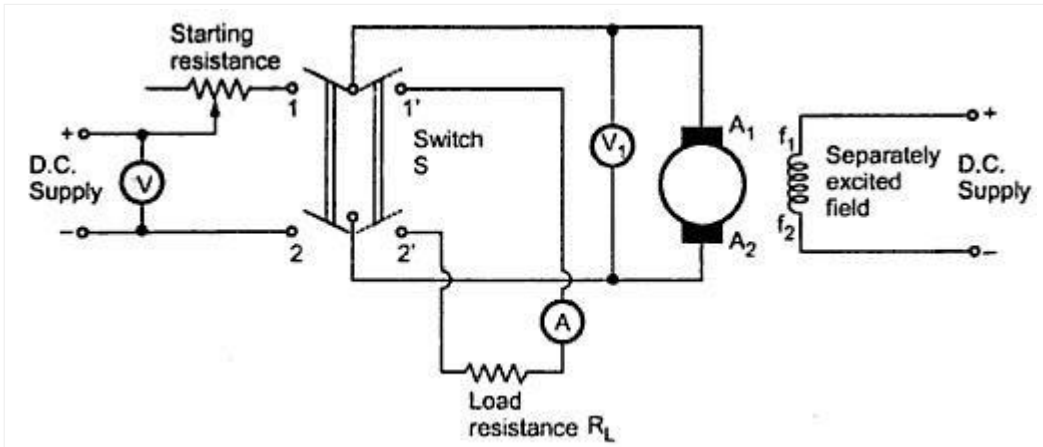

Fig. 2 Retardation test

Angular velocity, $\omega = (2\pi N)/60$

$$W = I\left(\frac{2\pi N}{60}\right)\frac{d}{dt}\left(\frac{2\pi N}{60}\right) = I\left(\frac{2\pi N}{60}\right)\left(\frac{2\pi}{60}\right)\frac{dN}{dt}$$

$$\therefore \quad \boxed{W = \left(\frac{2\pi}{60}\right)^2 I N \frac{dN}{dt}}$$

Thus, to find the rotational losses, the moment of inertia I and dN/dt must be known.
These quantities can be found as follows;

Determination of dN/dt

The voltmeter V_1 which is connected across the armature will read the back e.m.f. of the motor. We know that back e.m.f. is proportional to speed so that voltmeter is calibrated to read the speed directly.

When motor is cut off from the supply, the speed decrease in speed is noted with the help of stop watch. A curve showing variation between time and speed which is obtained from voltmeter which is suitably calibrated is shown in the Fig. 3.

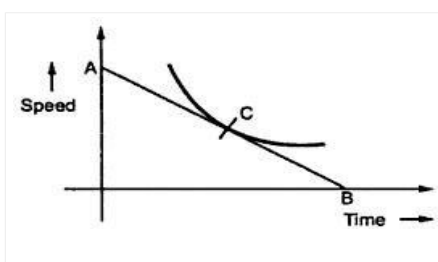

Fig. 3 Determination of dN/dt

At any point C corresponding to normal speed, a tangent AB is drawn. Then

$$\boxed{\frac{dN}{dt} = \frac{OA\ (\text{in r.p.m.})}{OB\ (\text{in seconds})}}$$

The value obtained from above can be substituted in the expression for W which can give the rotational looses.

Determination of moment of inertia (I):

Method 1: Using Flywheel

The armature supply is cut off and time required for definite change in speed is noted to draw the corresponding curve as we have drawn in previous case. This curve is drawn considering only armature of the machine. Now a flywheel with known moment of the inertia say is I_1 keyed onto the shaft and the same curve is drawn again. The slowing down time will be extended as combined moment of inertia of the two is increased.

For any given speed (dN/dt_1) and (dN/dt_2) are determined same as previous case. It can be seen that the losses in both the cases are almost same as addition of flywheel will not make much difference to the losses.

In the first case where flywheel is not there then,

$$W = \left(\frac{2\pi}{60}\right)^2 I\,N\,\frac{dN}{dt_1}$$

Adding the flywheel to the motor armature in second case we get,

$$W = \left(\frac{2\pi}{60}\right)^2 (I + I_1)\ N\,\frac{dN}{dt_2}$$

$$\therefore \quad I\,N\,\frac{dN}{dt_1} = (I + I_1)\,N\,\frac{dN}{dt_2}$$

$$\therefore \quad \frac{I+I_1}{I} = \frac{(dN/dt_1)}{(dN/dt_2)}$$

$$\therefore \quad I = \left[(I+I_1)\,\frac{dN}{dt_2}\right] \Big/ \left(\frac{dN}{dt_1}\right)$$

$$\therefore \quad I = I_1 \times \frac{dN/dt_2}{(dN/dt_1)-(dN/dt_2)} = I_1 \times \frac{dt_1}{dt_2 - dt_1}$$

$$\therefore \quad \boxed{I = I_1 \cdot \frac{t_1}{t_2 - t_1}}$$

Method 2: without using Flywheel

In this method time is noted for the machine to slow down by say 5 % considering the armature alone. The a retarding torque either mechanical or electrical is applied. Preferably electrical retarding torque is applied and time required to slow down by 5% is noted again. The method by which electrical

torque can be provided is shown in the Fig. 1 in which the switch S after disconnecting from the supply is thrown to terminals 1'2'. The machine then gets connected to a non-inductive load resistance R_L. The power drawn by this resistance will acts as a retarding torque on the armature which will make it slow more quickly.

The additional loss in the resistance will be equal to product of ammeter reading and the average reading of the voltmeter (for a fall of 5% of voltmeter reading, the time is noted.) The ammeter reading is also changing so its average reading is taken. Thus the additional losses is $I_a^2 (R_a + R)$. Let t_1 be the time when armature is considered alone and t_2 be the time when armature is connected across a load resistance, V be average voltage across R and I_a be the average current and W' is additional retarding electrical torque supplied by motor.

$$W = \left(\frac{2\pi}{60}\right)^2 I N \frac{dN}{dt_1}$$

$$W + W' = \left(\frac{2\pi}{60}\right)^2 I N \frac{dN}{dt_2}$$

If dN i.e. change in speed is same in two cases then

$$\frac{W + W'}{W} = \frac{1/dt_2}{1/dt_1} = \frac{dt_1}{dt_2} = \frac{t_1}{t_2}$$

$$\therefore \quad (W + W')\, t_2 = W\, t_1$$

$$\therefore \quad W\,(t_1 - t_2) = W' t_2$$

$$\therefore \quad \boxed{W = W' \frac{t_2}{t_1 - t_2}}$$

Here dN/dt_1 is rate of change in speed without extra load whereas dN/dt_2 is rate change in speed with extra electrical load which provides retarding torque.

UNIT V

SINGLE PHASE TRANSFORMERS

WORKING PRINCIPLE OF A TRANSFORMER:

The basic principle on which the transformer works is **Faraday's Law of Electromagnetic Induction** or mutual induction between the two coils. The working of the transformer is explained below. The transformer consists of two separate windings placed over the laminated silicon steel core.

The winding to which AC supply is connected is called primary winding and to which load is connected is called secondary winding as shown in the figure below. It works on the alternating current only because an alternating flux is required for mutual induction between the two windings.

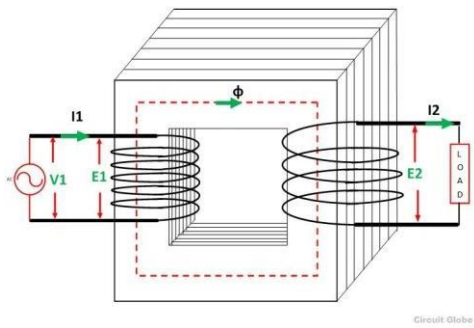

Fig: Simple Transformer

When the AC supply is given to the primary winding with a voltage of V_1, an alternating flux ϕ sets up in the core of the transformer, which links with the secondary winding and as a result of it, an emf is induced in it called Mutually Induced emf. The direction of this induced emf is opposite to the applied voltage V_1, this is because of the Lenz's law shown in the figure below

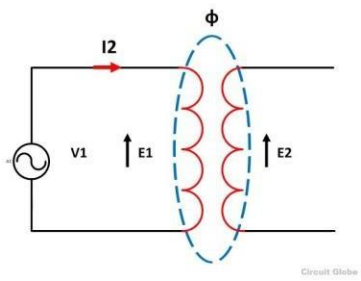

Fig: Transformer Symbol

Physically, there is no electrical connection between the two windings, but they are magnetically connected. Therefore, the electrical power is transferred from the primary circuit to the secondary circuit through mutual inductance. The induced emf in the primary and secondary windings depends upon the rate of change of flux linkage that is ($N\, d\phi/dt$).

$d\phi/dt$ is the change of flux and is same for both the primary and secondary windings. The induced emf E_1 in the primary winding is proportional to the number of turns N_1 of the primary windings ($E_1 \propto N_1$). Similarly induced emf in the secondary winding is proportional to the number of turns on the secondary side. ($E_2 \propto N_2$).

Transformer on DC supply:

As discussed above, the transformer works on AC supply, and it cannot work not DC supply. If the rated DC voltage is applied across the primary winding, a constant magnitude flux will set up in the core of the transformer and hence there will not be any self-induced emf generation, as for the linkage of flux with the secondary winding there must be an alternating flux required and not a constant flux.

According to Ohm's Law

$$\text{Primary Current} = \frac{\text{DC applied voltage}}{\text{Resistance of primary winding}}$$

The resistance of the primary winding is very low, and the primary current is high. So this current is much higher than the rated full load primary winding current. Hence, as a result, the amount of heat produced will be greater and therefore, eddy current loss (I^2R) loss will be more. Because of this, the insulations of the primary windings will get burnt, and the transformer will be damaged.

Turn Ratio:

It is defined as the ratio of primary to secondary turns.

$$\text{Turn ratio} = \frac{N_1}{N_2}$$

If $N_2 > N_1$ the transformer is called Step up transformer
If $N_2 < N_1$ the transformer is called Step down transformer

Transformation Ratio:

The transformation ratio is defined as the ratio of the secondary voltage to the primary voltage. It is denoted by K.

$$K = \frac{E_2}{E_1} = \frac{N_2}{N_1}$$

As ($E_2 \infty N_2$ and $E_1 \infty N_1$)

Ideal Transformer:

Definition: The transformer which is free from all types of losses is known as an ideal transformer. It is an imaginary transformer which has no core loss, no ohmic resistance and no leakage flux. The ideal transformer has the following important characteristic.

1. The resistance of their primary and secondary winding becomes zero.
2. The core of the ideal transformer has infinite permeability. The infinite permeable means less magnetising current requires for magnetising their core.
3. The leakage flux of the transformer becomes zero, i.e. the whole of the flux induces in the core of the transformer links with their primary and secondary winding.
4. The ideal transformer has 100 percent efficiency, i.e., the transformer is free from hysteresis and eddy current loss.

The above mention properties are not possible in the practical transformer. In an ideal transformer, there is no power loss. Therefore, the output power is equal to the input power.

$$E_2 I_2 \cos\varphi = E_1 I_1 \cos\varphi \quad \text{or} \quad E_2 I_2 = E_1 I_1$$

OR

$$\frac{E_2}{E_1} = \frac{I_1}{I_2}$$

Since $E_l \infty N_2$ and $E_1 \infty N_1$, also E_1 is similar to V_1 and E_2 is similar to V_2

Therefore, transformation ratio will be given by the equation shown below

$$\frac{V_2}{V_1} = \frac{E_2}{E_1} = \frac{N_2}{N_1} = \frac{I_1}{I_2} = K$$

The primary and the secondary currents are inversely proportional to their respective turns.

Behaviour of Ideal Transformer:

Consider the ideal transformer shown in the figure below. The voltage source $V_1$is applied across the primary winding of the transformer. Their secondary winding is kept open. The N_1 and N_2 are the numbers of turns of their primary and secondary winding.

The current I_m is the magnetizing current flows through the primary winding of the transformer. The magnetizing current produces the flux φ_m in the core of the transformer. As the permeability of the core is infinite, the flux of the core link with both the primary and secondary winding of the transformer.

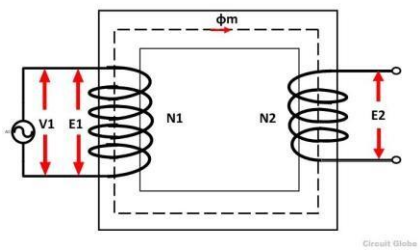

Fig: Ideal Trasfomer

The flux link with the primary winding induces the emf E_1 because of self-induction. The direction of the induced emf is inversely proportional to the applied voltage V_1. The emf E_2 induces in the secondary winding of the transformer because of mutual induction.\

Phasor Diagram of Ideal Transformer:

The phasor diagram of the ideal transformer is shown in the figure below. As the coil of the primary transformer is purely inductive the magnetising current induces in the transformer lag 90º by the input voltage V_1. The E_1 and E_2 are the emf induced in the primary and secondary winding of the transformer. The direction of the induces emf inversely proportional to the applied voltage

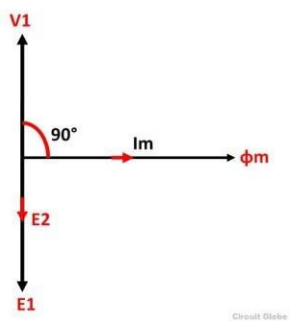

Phasor Diagram of an Ideal Transformer

Point to Remember

The input energy of the transformer is equal to their output energy. The power loss in the ideal transformer becomes zero.

EMF EQUATION OF A TRANSFORMER:

When a sinusoidal voltage is applied to the primary winding of a transformer, alternating flux ϕ_m sets up in the iron core of the transformer. This sinusoidal flux links with both primary and secondary winding.

The function of flux is a sine function. The rate of change of flux with respect to time is derived mathematically.

The derivation of **EMF Equation** of the transformer is shown below. Let

- ϕ_m be the maximum value of flux in Weber
- f be the supply frequency in Hz
- N_1 is the number of turns in the primary winding
- N_2 is the number of turns in the secondary winding

Φ is the flux per turn in Weber

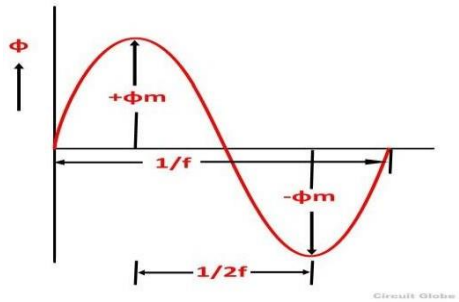

Fig: Flux waveform

As shown in the above figure that the flux changes from + ϕ_m to – ϕ_m in half a cycle of 1/2f seconds.
By Faraday's Law
Let E_1 is the emf induced in the primary winding

$$E_1 = -\frac{d\psi}{dt} \ldots\ldots\ldots (1)$$

Where $\Psi = N_1\phi$

$$\text{Therefore, } E_1 = -N_1 \frac{d\varphi}{dt} \ldots\ldots\ldots (2)$$

Since ϕ is due to AC supply $\phi = \phi_m$ Sinwt

$$E_1 = -N_1 \frac{d}{dt} (\varphi_m \text{ Sinwt})$$

$$E_1 = -N_1 w\varphi_m \text{ Coswt}$$

$$E_1 = N_1 w\varphi_m \text{ Sin}(wt - \pi/2) \ldots\ldots\ldots (3)$$

So the induced emf lags flux by 90 degrees.
Maximum valve of emf

$$E_1 max = N_1 w\varphi_m \ldots\ldots\ldots (4)$$

But w = 2πf

$$E_1 max = 2\pi f N_1 \varphi_m \ldots\ldots\ldots (5)$$

Root mean square RMS value is

$$E_1 = \frac{E_{1max}}{\sqrt{2}} \ldots\ldots\ldots (6)$$

Putting the value of E_1max in equation (6) we get

$$E_1 = \sqrt{2}\pi f N_1 \varphi_m \ldots\ldots (7)$$

Putting the value of π = 3.14 in the equation (7) we will get the value of E_1 as

$$E_1 = 4.44fN_1\varphi_m \ldots\ldots\ldots (8)$$

Similarly

$$E_2 = \sqrt{2}\pi fN_2\varphi_m$$

Or

$$E_2 = 4.44fN_2\varphi_m \ldots\ldots\ldots (9)$$

Now, equating the equation (8) and (9) we get

$$\frac{E_2}{E_1} = \frac{4.44fN_2\varphi_m}{4.44fN_1\varphi_m}$$

Or

$$\frac{E_2}{E_1} = \frac{N_2}{N_1} = K$$

The above equation is called the turn ratio where K is known as transformation ratio.
The equation (8) and (9) can also be written as shown below using the relation
($\phi m = B_m \times A_i$) where A_i is the iron area and B_m is the maximum value of flux density.

$$E_1 = 4.44N_1fB_mA_i \text{ Volts} \quad \text{and} \quad E_2 = 4.44N_2fB_mA_i \text{ Volts}$$

For a sinusoidal wave

$$\frac{\text{R.M.S value}}{\text{Average value}} = \text{Form factor} = 1.11$$

Magnetic Leakage flux:

In a transformer it is observed that, all the flux linked with primary winding does not get linked with secondary winding. A small part of the flux completes its path through air rather than through the core (as shown in the fig at right), and this small part of flux is called as leakage flux or magnetic leakage in transformers. This leakage flux does not link with both the windings, and hence it does not contribute to transfer of energy from primary winding to secondary winding. But, it produces self induced emf in each winding. Hence, leakage flux produces an effect equivalent to an inductive coil in series with each winding. And due to this there will be leakage reactance.

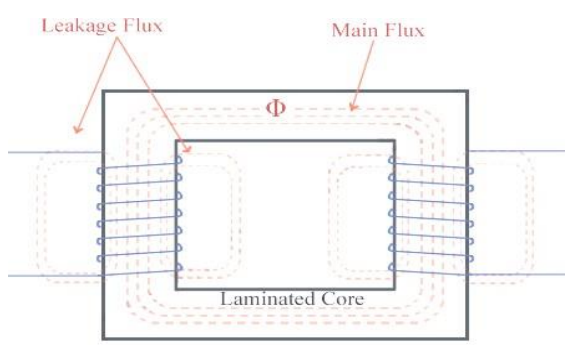

Fig: Magnetic Leakage flux

(To minimize this leakage reactance, primary and secondary windings are not placed on separate legs, refer the diagram of core type and shell type transformer from construction of transformer.)

Practical Transformer with Resistance and Leakage Reactance

In the following figure, leakage reactance and resistance of the primary winding as well as secondary winding are taken out, representing a practical transformer.

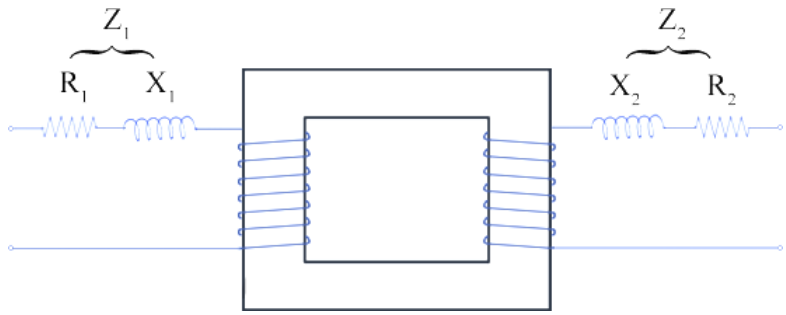

Fig; Practical Transformer with Resistance And Leakage Reactance

Where, R_1 and R_2 = resistance of primary and secondary winding respectively
X_1 and X_2 = **leakage reactance** of primary and secondary winding resp.
Z_1 and Z_2 = Primary impedance and secondary impedance resp.

$Z_1 = R_1 + jX_1$ ...and $Z_2 = R_2 + jX_2$.

The impedance in each winding lead to some voltage drop in each winding. Considering this voltage drop the **voltage equation of transformer** can be given as –

$V_1 = E_1 + I_1(R_1 + jX_1)$-------- primary side
$V_2 = E_2 - I_2(R_2 + jX_2)$-------- secondary side

where, V_1 = supply voltage of primary winding
V_2 = terminal voltage of secondary winding

E_1 and E_2 = induced emf in primary and secondary winding respectively.

Resistance and Reactance of the Transformer:

The Resistance of the transformer is defined as the internal resistance of both primary and secondary windings. In an actual transformer, the primary and the secondary windings have some resistance represented by R1 and R2 and the reactances by X1 and X2. Let K be the transformation ratio. To make the calculations easy the resistances and reactances can be transferred to either side that means either all the primary terms are referred to the secondary side, or all the secondary terms are referred to the primary side.

The resistive and the reactive drops in the primary and secondary side are represented as follows

- Resistive drop in the secondary side = I2R2
- Reactive drop in the secondary side = I2X2
- Resistive drop in the primary side = I1R1
- Reactive drop in the primary side = I1X1

Primary Side Referred to Secondary Side

Since the transformation ratio is K, primary resistive and reactive drop as referred to secondary side will be K times, i.e., K I1R1 and K I1X1 respectively. If I1 is substituted equal to KI2 then we have primary resistive and reactive drop referred to secondary side equal to K^2I2R1 and K^2I2X1 respectively.

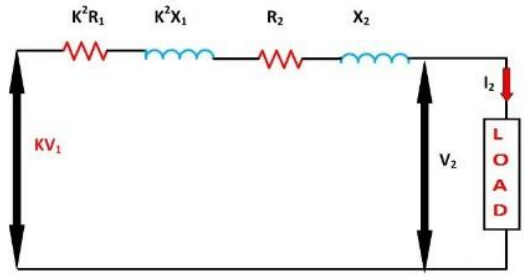

The Total resistive drop in a transformer

$$K^2I_2R_1 + I_2R_2 = I_2\,(K^2R_1 + R_2)$$

Total reactive drop in a transformer

$$K^2I_2X_1 + I_2X_2 = I_2\,(K^2X_1 + X_2)$$

The term

$(K^2R_1 + R_2)$ And $(K^2X_1 + X_2)$ represent the equivalent resistance and reactance of the transformer referred to the secondary side.

TRANSFORMER ON NO-LOAD CONDITION:

When the transformer is operating at no load, the secondary winding is open circuited, which means there is no load on the secondary side of the transformer and, therefore, current in the secondary will be zero, while primary winding carries a small current I_0 called no load current which is 2 to 10% of the rated current. This current is responsible for supplying the iron losses (hysteresis and eddy current losses) in the core and a very small amount of copper losses in the primary winding. The angle of lag depends upon the losses in the transformer. The power factor is very low and varies from 0.1 to 0.15.

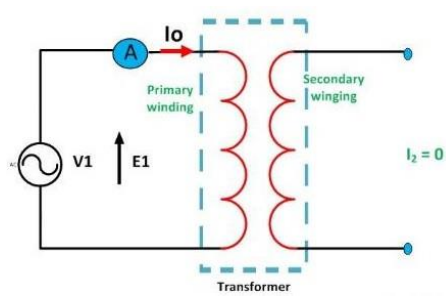

Fig: Transformer is operating at no load

The no load current consists of two components

- Reactive or magnetizing component I_m
  (It is in quadrature with the applied voltage V_1. It produces flux in the core and does not consume any power)
- Active or power component I_w, also known as working component
  (It is in phase with the applied voltage V_1. It supplies the iron losses and a small amount of primary copper loss)

The following steps are given below to draw the phasor diagram

1. The function of the magnetizing component is to produce the magnetizing flux, and thus, it will be in phase with the flux.
2. Induced emf in the primary and the secondary winding lags the flux ϕ by 90 degrees.
3. The primary copper loss is neglected, and secondary current losses are zero as $I_2 = 0$. Therefore, the current I_0 lags behind the voltage vector V_1 by an angle ϕ_0 called no-load power factor angle shown in the phasor diagram above.
4. The applied voltage V_1 is drawn equal and opposite to the induced emf E_1 because the difference between the two, at no load, is negligible.
5. Active component I_w is drawn in phase with the applied voltage V_1.
6. The phasor sum of magnetizing current I_m and the working current I_w gives the no load current I_0.

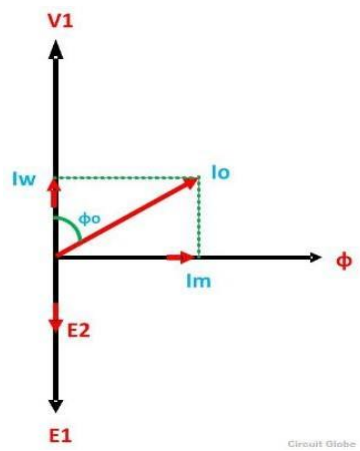

Fig: Phasor diagram drawn

Working component $I_w = I_0 \cos\varphi_0$

No load current $I_0 = \sqrt{I_w^2 + I_m^2}$

Magnetizing component $I_m = I_0 \sin\varphi_0$

Power factor $\cos\varphi_0 = \frac{I_w}{I_0}$

No load power input $P_0 = V_1 I_0 \cos\varphi_0$

TRANSFORMER ON LOAD CONDITION:

When the transformer is on loaded condition, the secondary of the transformer is connected to load. The load can be resistive, inductive or capacitive. The current I_2 flows through the secondary winding of the transformer. The magnitude of the secondary current depends on the terminal voltage V_2 and the load impedance. The phase angle between the secondary current and voltage depends on the nature of the load.

Operation of the Transformer on Load Condition

The Operation of the Transformer on Load Condition is explained below

- When secondary of the transformer is kept open, it draws the no-load current from the main supply. The no-load current induces the magneto motive force N_0I_0 and this force set up the flux Φ in the core of the transformer. The circuit of the transformer at no load condition is shown in the figure below.

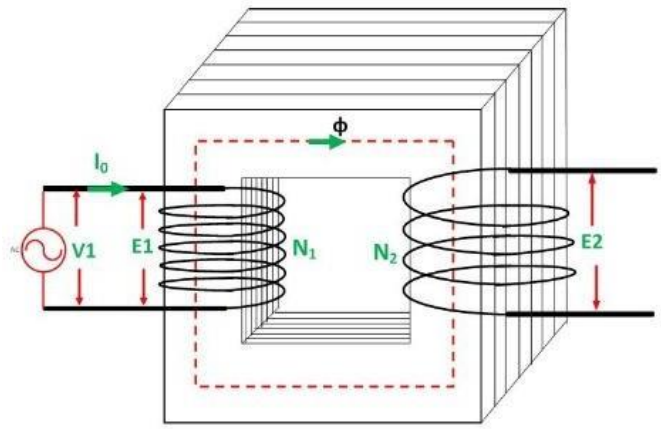

Fig: Operation of the Transformer on Load Condition

- When the load is connected to the secondary of the transformer, the I2current flows through their secondary winding. The secondary current induces the magnetomotive force N2I2 on the secondary winding of the transformer. This force set up the flux φ2 in the transformer core. The flux φ2 oppose the flux φ, according to Lenz's law

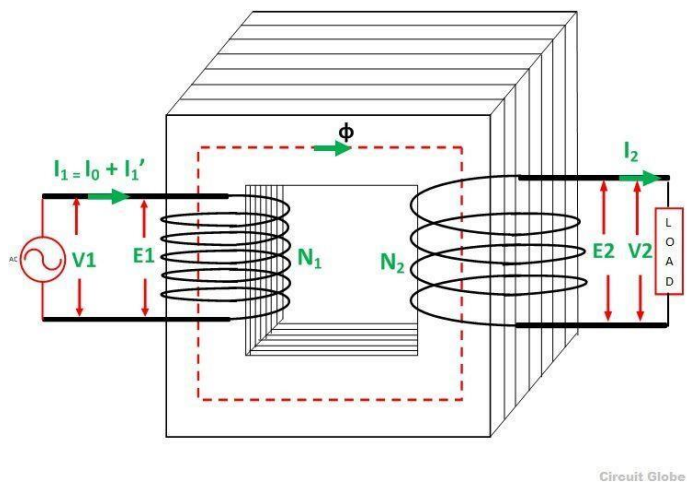

Fig: Operation of the Transformer on Load Condition

- As the flux φ2 opposes the flux φ, the resultant flux of the transformer decreases and this flux reduces the induces EMF E1. Thus, the strength of the V1 is more than E1 and an additional primary current I'1 drawn from the main supply. The additional current is used for restoring the original value of the flux in the core of the transformer so that the V1 = E1. The primary current I'1 is in phase opposition with the secondary current I2. Thus, it is called the primary counter balancing current.
- The additional current I'1 induces the magnetomotive force N1I'1. And this force set up the flux φ'1. The direction of the flux is same as that of the φ and it cancels the flux φ2 which induces because of the MMF N2I2

Now, $N_1I_1' = N_2I_2$

$$I_1' = \left(\frac{N_2}{N_1}\right) I_2 = KI_2$$

Therefore,

- The phasor difference between V1 and I1 gives the power factor angle ϕ1 of the primary side of the transformer.
- The power factor of the secondary side depends upon the type of load connected to the transformer.
- If the load is inductive as shown in the above phasor diagram, the power factor will be lagging, and if the load is capacitive, the power factor will be leading.The total primary current I1 is the vector sum of the current I0 and I1'. i.e

$$\overline{I_1} = \overline{I_0} + \overline{I_1'}$$

Phasor Diagram of Transformer on Inductive Load:

The phasor diagram of the actual transformer when it is loaded inductively is shown below

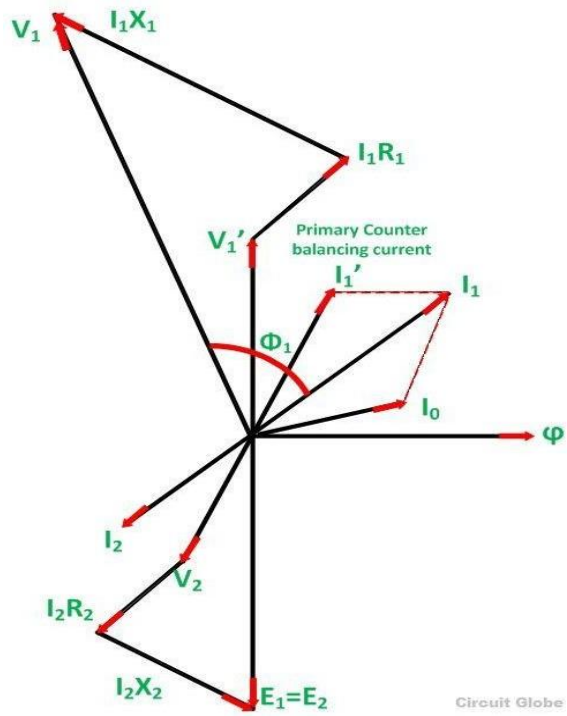

Phasor Diagram of the Transformer on Inductive Load

Steps to draw the phasor diagram

- Take flux ϕ a reference
- Induces emf E_1 and E_2 lags the flux by 90 degrees.
- The component of the applied voltage to the primary equal and opposite to induced emf in the primary winding. E_1 is represented by V_1'.
- Current I_0 lags the voltage V_1' by 90 degrees.
- The power factor of the load is lagging. Therefore current I_2 is drawn lagging E_2 by an angle ϕ_2.

- The resistance and the leakage reactance of the windings result in a voltage drop, and hence secondary terminal voltage V_2 is the phasor difference of $E_2$and voltage drop.
  $V_2 = E_2$ – voltage drops
  $I_2 R_2$ is in phase with I_2 and I_2X_2 is in quadrature with I_2.
- The total current flowing in the primary winding is the phasor sum of I1' and I0.
- Primary applied voltage V1 is the phasor sum of V1' and the voltage drop in the primary winding.
- Current I1' is drawn equal and opposite to the current I2
  $V_1 = V_1' +$ voltage drop
  I_1R_1 is in phase with I_1 and I_1X_I is in quadrature with I_1.
- The phasor difference between V1 and I1 gives the power factor angle ϕ1 of the primary side of the transformer.
- The power factor of the secondary side depends upon the type of load connected to the transformer.
- If the load is inductive as shown in the above phasor diagram, the power factor will be lagging, and if the load is capacitive, the power factor will be leading. Where I1R1 is the resistive drop in the primary windings

I2X2 is the reactive drop in the secondary winding

Phasor Diagram of Transformer on Capacitive Load

The Transformer on Capacitive load (leading power factor load) is shown below in the phasor diagram.

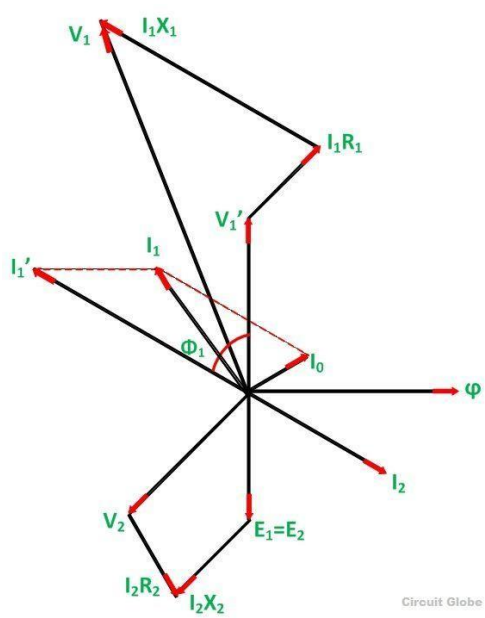

Phasor Diagram of the Transformer on Capacitive Load

Steps to draw the phasor diagram at capacitive load

- Take flux ϕ a reference
- Induces emf E1 and E2 lags the flux by 90 degrees.
- The component of the applied voltage to the primary equal and opposite to induced emf in the primary winding. E1 is represented by V1'.
- Current I0 lags the voltage V1' by 90 degrees.

- The power factor of the load is leading. Therefore current I2 is drawn leading E2
- The resistance and the leakage reactance of the windings result in a voltage drop, and hence secondary terminal voltage V2 is the phasor difference of E2and voltage drop.
  $V_2 = E_2$ – voltage drops
  $I_2 R_2$ is in phase with I_2 and I_2X_2 is in quadrature with I_2.
- Current I1' is drawn equal and opposite to the current I2
- The total current I1 flowing in the primary winding is the phasor sum of I1' and I0.
- Primary applied voltage V1 is the phasor sum of V1' and the voltage drop in the primary winding.
  $V_1 = V_1'$ + voltage drop
  I_1R_1 is in phase with I_1 and I_1X_I is in quadrature with I_1.
- The phasor difference between V1 and I1 gives the power factor angle ϕ1 of the primary side of the transformer.
- The power factor of the secondary side depends upon the type of load connected to the transformer.

EQUIVALENT CIRCUIT OF A TRANSFORMER:

The equivalent circuit diagram of any device can be quite helpful in predetermination of the behaviour of the device under the various condition of operation. It is simply the circuit representation of the equation describing the performance of the device.

The simplified equivalent circuit of a transformer is drawn by representing all the parameters of the transformer either on the secondary side or on the primary side. The equivalent circuit diagram of the transformer is shown below

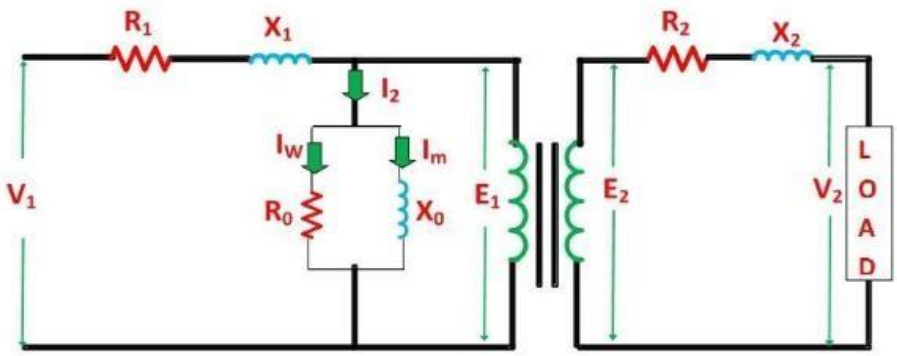

Fig: Equivalent circuit diagram of a transformer

Let the equivalent circuit of a transformer having the transformation ratio $K = E_2/E_1$

The induced emf E_1 is equal to the primary applied voltage V_1 less primary voltage drop.This voltage causes current I_0 no load current in the primary winding of the transformer. The value of no-load current is very small, and thus, it is neglected. Hence, $I_1 = I_1'$. The no load current is further divided into two components called magnetizing current (I_m) and working current (I_w).

These two components of no-load current are due to the current drawn by a noninductive resistance R_0 and pure reactance X_0 having voltage E_1 or (V_1 – primary voltage drop).

The secondary current I_2 is

$$I_2 = \frac{I_1'}{K} = \frac{I_1 - I_0}{K}$$

The terminal voltage V_2 across the load is equal to the induced emf E_2 in the secondary winding less voltage drop in the secondary winding.

Equivalent Circuit when all the Quantities are referred to Primary side:

In this case to draw the equivalent circuit of the transformer all the quantities are to be referred to the primary as shown in the figure below

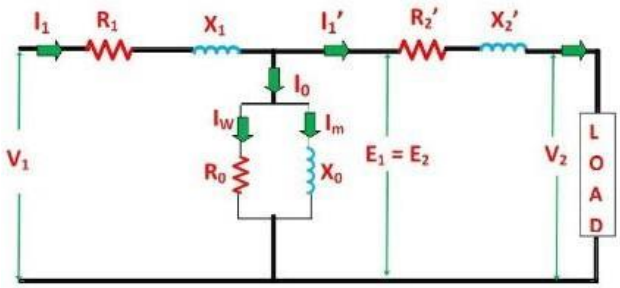

Fig: Circuit Diagram of Transformer when all the Secondary Quantities are Referred to Primary Side

The following are the values of resistance and reactance given below
Secondary resistance referred to primary side is given as

$$R_2' = \frac{R_2}{K^2}$$

The equivalent resistance referred to primary side is given as

$$R_{ep} = R_1 + R_2'$$

Secondary reactance referred to primary side is given as

$$X_2' = \frac{X_2}{K^2}$$

The equivalent reactance referred to primary side is given as

$$X_{ep} = X_1 + X_2'$$

Equivalent Circuit when all the Quantities are referred to Secondary side:

The equivalent circuit diagram of the transformer is shown below when all the quantities are referred to the secondary side.

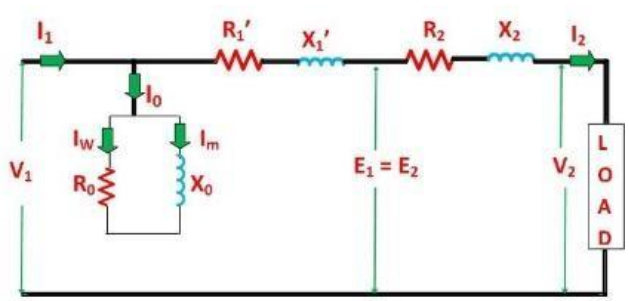

Fig: Circuit Diagram of Transformer When All the Primary Quantities are Referred to Secondary Side

The following are the values of resistance and reactance given below
Primary resistance referred to secondary side is given as

$$R_1' = K^2 R_1$$

The equivalent resistance referred to secondary side is given as

$$R_{es} = R_2 + R_1'$$

Primary reactance referred to secondary side is given as

$$X_1' = K^2 X_1$$

The equivalent reactance referred to secondary side is given as

$$X_{eq} = X_2 + X_I'$$

No load current I_0 is hardly 3 to 5% of full load rated current, the parallel branch consisting of resistance R_0 and reactance X_0 can be omitted without introducing any appreciable error in the behavior of the transformer under the loaded condition.

Further simplification of the equivalent circuit of the transformer can be done by neglecting the parallel branch consisting R_0 and X_0. The simplified circuit diagram of the transformer is shown below

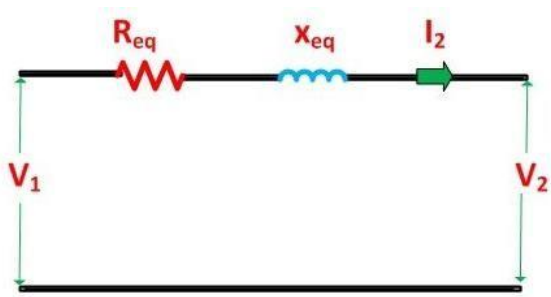

Fig: Simplified Equivalent Circuit Diagram of a Transformer

VOLTAGE REGULATION OF A TRANSFORMER:

Definition: The voltage regulation is defined as the change in the magnitude of receiving and sending the voltage of the transformer. The voltage regulation determines the ability of the transformer to provide the constant voltage for variable loads.

When the transformer is loaded with continuous supply voltage, the terminal voltage of the transformer varies. The variation of voltage depends on the load and its power factor.

Mathematically, the voltage regulation is represented as

$$\text{Voltage Regulation} = \frac{E_2 - V_2}{E_2}$$

$$\%\ \text{Voltage Regulation} = \frac{E_2 - V_2}{E_2} \times 100$$

Where,

E_2 – secondary terminal voltage at no load

V_2 – secondary terminal voltage at full load

The voltage regulation by considering the primary terminal voltage of the transformer is expressed as,

$$\%\ \text{Voltage Regulation} = \frac{V_1 - E_1}{V_1} \times 100$$

Let us understand the voltage regulation by taking an example explained below

If the secondary terminals of the transformer are open circuited or no load is connected to the secondary terminals, the no-load current flows through it. If the no current flows through the secondary terminals of the transformer, the voltage drops across their resistive and reactive load become zero. The voltage drop across the primary side of the transformer is negligible.

If the transformer is fully loaded, i.e., the load is connected to their secondary terminal, the voltage drops appear across it. The value of the voltage regulation should always be less for the better performance of transformer.

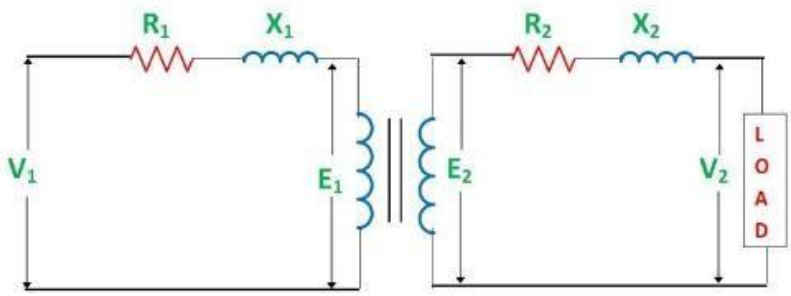

Fig: Equivalent Circuit of transformer

From the circuit diagram shown above, the following conclusions are made

- The primary voltage of the transformer is always greater than the emf induces on the primary side. $V_1 > E_1$
- The secondary terminal voltage at no load is always greater than the voltage at full load condition. $E_2 > V_2$

By considering the above circuit diagram, the following equations are drawn

$$V_1 = I_1R_1\cos\varphi_1 + I_1X_1\sin\varphi_1 + E_1$$

$$E_2 = I_2R_2\cos\varphi_2 + I_2X_2\sin\varphi_2 + V_2$$

The approximate expression for the no-load secondary voltage for the different types of load is

For inductive load:

$$E_2 = I_2R_{02}\cos\varphi_2 + I_2X_{02}\sin\varphi_2 + V_2$$

OR

$$E_2 - V_2 = I_2R_{02}\cos\varphi_2 + I_2X_{02}\sin\varphi_2$$

OR

$$\frac{E_2 - V_2}{E_2} \text{ x } 100 = \frac{I_2R_{02}}{E_2} \text{ x } 100 \cos\varphi_2 + \frac{I_2X_{02}}{E_2} \text{ x } 100 \sin\varphi_2$$

Where,

$\frac{I_2R_{02}}{E_2}$ x 100 is a percentage resistance drop

$\frac{I_2X_{02}}{E_2}$ x 100 is a percentage reactance drop

For Capacitive load:

$$E_2 = I_2R_{02}Cos\varphi_2 - I_2X_{02}Sin\varphi_2 + V_2$$

OR

$$E_2 - V_2 = I_2R_{02}Cos\varphi_2 - I_2X_{02}Sin\varphi_2$$

OR

$$\frac{E_2 - V_2}{E_2} \text{ x } 100 = \frac{I_2R_{02}}{E_2} \text{ x } 100 \ Cos\varphi_2 - \frac{I_2X_{02}}{E_2} \text{ x } 100 \ Sin\varphi_2$$

ALL DAY EFFICIENCY OF A TRANSFORMER:

Definition: All day efficiency means the power consumed by the transformer throughout the day. It is defined as the ratio of output power to the input power in kWh or Wh of the transformer over 24 hours.

Mathematically, it is represented as

$$\text{All day efficiency, } \eta_{\text{all day}} = \frac{\text{output in kWh}}{\text{input in kWh}} \quad \text{(for 24 hours)}$$

All day efficiency of the transformer depends on their load cycle. The load cycle of the transformer means the repetitions of load on it for a specific period.

The ordinary or commercial efficiency of a transformer define as the ratio of the output power to the input power.

$$\eta = \frac{\text{output power}}{\text{input power}} = \frac{\text{output power}}{\text{output power + losses}}$$

What is the need of All Day Efficiency?

Some transformer efficiency cannot be judged by simple commercial efficiency as the load on certain transformer fluctuates throughout the day. For example, the distribution transformers are energised for 24 hours, but they deliver very light loads for the major portion of the day, and they do not supply rated or full load, and most of the time the distribution transformer has 50 to 75% load on it.

As we know, there are various losses in the transformer such as iron and copper loss. The iron loss takes place in the core of the transformer. Thus, the iron or core loss occurs for the whole day in the distribution transformer. The second type of loss known as copper loss takes place in the windings of the transformer also known as the variable loss. It occurs only when the transformers are in the loaded condition.

Hence, the performance of such transformers cannot be judged by the commercial or ordinary efficiency, but the efficiency is calculated or judged by All Day Efficiency also known as operational efficiency or energy efficiency which is computed by energy consumed during 24 hours.

POLARITY TEST OF TRANSFORMER:

Polarity means the direction of the induced voltages in the primary and the secondary winding of the transformer. If the two transformers are connected in parallel, then the polarity should be known for the

proper connection of the transformer. There are two types of polarity one is **Additive**, and another is **Subtractive**.

Additive Polarity: In additive polarity the same terminals of the primary and the secondary windings of the transformer are connected

Subtractive Polarity: In subtractive polarity different terminals of the primary and secondary side of the transformer are connected.

Explanation with Connection Diagram:

Each of the terminals of the primary as well as the secondary winding of a transformer is alternatively positive and negative with respect to each other as shown in the figure below. Let A_1 and A_2 be the positive and negative terminal respectively of the transformer primary and a_1, a_2 are the positive and negative terminal of the secondary side of the transformer.

If A_1 is connected to a_1 and A_2 is connected to a_2 that means similar terminals of the transformer are connected, then the polarity is said to be additive. If A_1 is connected to a_2 and A_2 to a_1, that means the opposite terminals are connected to each other, and thus the voltmeter will read the subtractive polarity.

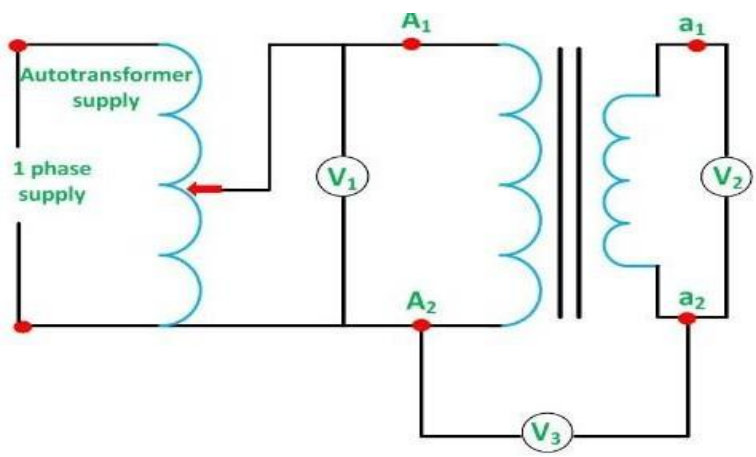

Fig: Polarity test

It is essential to know the relative polarities at any instant of the primary and the secondary terminals for making the correct connections if the transformers are to be connected in parallel or they are used in a three phase circuit.

In the primary side, the terminals are marked as A_1 and A_2 and from the secondary side the terminals are named as a_1 and a_2. The terminal A_1 is connected to one end of the secondary winding, and a voltmeter is connected between A_2 and the other end of the secondary winding.

When the voltmeter reads the difference that is $(V_1 - V_2)$, the transformer is said to be connected with opposite polarity know as Subtractive polarity and when the voltmeter reads $(V_1 + V_2)$, the transformer is said to have additive polarity.

Steps to Perform Polarity Test:

- Connect the circuit as shown in the above circuit diagram figure and set the autotransformer to zero position.
- Switch on the single phase supply
- Records the values of the voltages as shown by the voltmeter V_1, V_2 and V_3.

- If the reading of the V_3 shows the addition of the value of V_1 and V_2 that is $V_2 = V_1 + V_2$ the transformer is said to be connected in additive polarity.
- If the reading of the V_3 is the subtraction of the readings of V_1 and V_2, then the transformer is said to be connected in subtractive or negative polarity.

RESISTANCE MEASUREMENT:

This test is a verification that proper sizes of conductors have been used and that the joints have been made properly. Since this test is indicative in nature, there is no tolerance applicable to the measured resistances. Resistances of the windings are measured by using 'Resistance Bridge'.

This test also serves two other important testing functions:
(a) The measured resistance is used for obtaining $I^2 R$, which is used in the 'Load loss' test.
(b) Measurements of cold resistance and hot resistance are used for calculation of temperature rise of windings during the Temperature Rise Test.

The measurement of resistance is done at room temperature but corrected to a reference temperature which is 20 degrees higher than the temperature class of the unit. For example : the reference temperature is 75 ^{0}C for 55 ^{0}C rise oil-filled units, or is 85 ^{0}C for 65 ^{0}C rise units. For dry type transformers the typical rises are 80^{0}C, 115 ^{0}C and 150 ^{0}C.

OPEN CIRCUIT AND SHORT CIRCUIT TEST ON TRANSFORMER

The open circuit and short circuit test are performed for determining the parameter of the transformer like their efficiency, voltage regulation, circuit constant etc. These tests are performed without the actual loading and because of this reason the very less power is required for the test. The open circuit and the short circuit test gives the very accurate result as compared to the full load test.

Open Circuit Test:

The purpose of the open circuit test is to determine the no-load current and losses of the transformer because of which their no-load parameter are determined. This test is performed on the primary winding of the transformer. The wattmeter, ammeter and the voltage are connected to their primary winding. The nominal rated voltage is supplied to their primary winding with the help of the ac source.

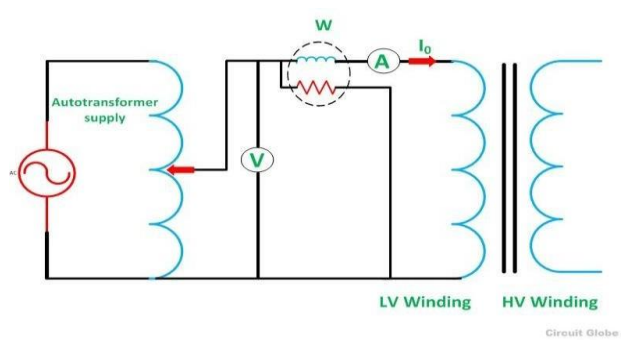

Fig: Circuit Diagram of Open Circuit Test on Transformer

The secondary winding of the transformer is kept open and the voltmeter is connected to their terminal. This voltmeter measures the secondary induced voltage. As the secondary of the transformer is open the no-load current flows through the primary winding.

The value of no-load current is very small as compared to the full rated current. The copper loss occurs only on the primary winding of the transformer because the secondary winding is open. The reading of the wattmeter only represents the core and iron losses. The core loss of the transformer is same for all types of loads.

Calculation of open circuit test:

Let,
W_0 – wattmeter reading
V_1 – voltmeter reading
I_0 – ammeter reading

Then the iron loss of the transformer $P_i = W_0$ and

$$W_0 = V_1 I_0 \cos\varphi_0 \quad \ldots\ldots\ldots\ldots(1)$$

The no-load power factor is

$$\cos\varphi_0 = \frac{W_0}{V_1 I_0}$$

Working component I_w is

$$I_w = \frac{W_0}{V_1} \ldots\ldots\ldots\ldots(2)$$

Putting the value of W_0 from the equation (1) in equation (2) you will get the value of working component as

$$I_w = I_0 \cos\varphi_0$$

Magnetizing component is

$$I_m = \sqrt{I_0^2 - I_w^2}$$

No load parameters are given below

Equivalent exciting resistance is

$$R_0 = \frac{V_1}{I_w}$$

Equivalent exciting reactance is

$$X_0 = \frac{V_1}{I_m}$$

The iron losses measured by the open circuit test are used for calculating the efficiency of the transformer.

Short Circuit Test:

The short circuit test is performed for determining the below mention parameter of the transformer.

- It determines the copper loss occur on the full load. The copper loss is used for finding the efficiency of the transformer.
- The equivalent resistance, impedance, and leakage reactance are known by the short circuit test.
  The short circuit test is performed on the secondary or high voltage winding of the transformer. The measuring instrument like wattmeter, voltmeter and ammeter are connected to the High voltage winding of the transformer. Their primary winding is short circuited by the help of thick strip or ammeter which is connected to their terminal.

The low voltage source is connected across the secondary winding because of which the full load current flows from both the secondary and the primary winding of the transformer. The full load current is measured by the ammeter connected across their secondary winding.

The circuit diagram of the short circuit test is shown below

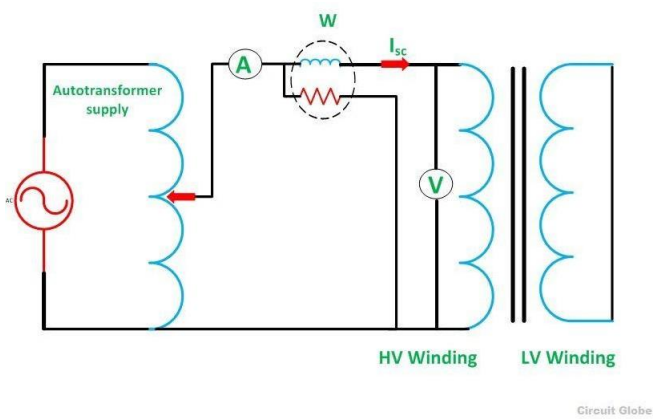

Fig: Circuit Diagram of Short Circuit Test on Transformer

The low voltage source is applied across the secondary winding which is approximately 5 to 10% of the normal rated voltage. The flux is set up in the core of the transformer. The magnitude of the flux is small as compared to the normal flux.

The iron loss of the transformer depends on the flux. It is less occur in the short circuit test because of the low value of flux. The reading of the wattmeter only determines the copper loss occur on their windings. The voltmeter measures the voltage applied to their high voltage winding. The secondary current induces in the transformer because of the applied voltage.

Calculation of Short Circuit Test

Let,

W_c – Wattmeter reading

V_{2sc} – voltmeter reading

I_{2sc} – ammeter reading

Then the full load copper loss of the transformer is given by

$$P_c = \left(\frac{I_{2fl}}{I_{2sc}}\right)^2 W_c \qquad \text{And} \qquad I_{2sc}^2 R_{es} = W_c$$

Equivalent resistance referred to secondary side is

$$R_{es} = \frac{W_c}{I_{2sc}^2}$$

Equivalent impedance referred to the secondary side is given by

$$Z_{es} = \frac{V_{2sc}}{I_{2sc}}$$

The Equivalent reactance referred to the secondary side is given by

$$X_{es} = \sqrt{(Z_{es})^2 - (R_{es})^2}$$

The voltage regulation of the transformer can be determined at any load and power factor after knowing the values of Z_{es} and R_{es}.

In the short circuit test the wattmeter record, the total losses including core loss but the value of core loss are very small as compared to copper loss so, the core loss can be neglected.

BACK-TO-BACK TEST (SUMPNER'S TEST) ON TRANSFORMER

Definition: The full load test on a small transformer is very convenient, but on the large transformer, it is very difficult. The maximum temperature rise in a large transformer is determined by the full load test. This test is called, back-to-back test, regenerative test or Sumpner's test.

The suitable load which absorbs the full load power of a large transformer will not easily be available. Hence a large amount of energy will be wasted. The back-to-back test determines the maximum temperature rise in a transformer, and hence the load is chosen according to the capability of the transformer.

Back to Back Test Circuit:

The two identical transformers are used for the back to back test. Consider the $T_{r1}$and T_{r2} are the primary windings of the transformer connected parallel to each other. The nominal rated voltage and frequency is supplied to their primary winding. The voltmeter and ammeter are connected on their primary side for the measurement of the input voltage and current.

The secondary winding of the transformer is connected in series with the each other but with opposite polarity. The voltmeter V_2 is connected to the terminal of the secondary winding for the measurement of the voltage.

The series opposition of the secondary winding is determined by connecting there any two terminals; the voltmeter is connected across their remaining terminals. If it is connected in series opposition, the voltmeter gives the zero reading. The open terminal is used for measuring the parameter of the transformer.

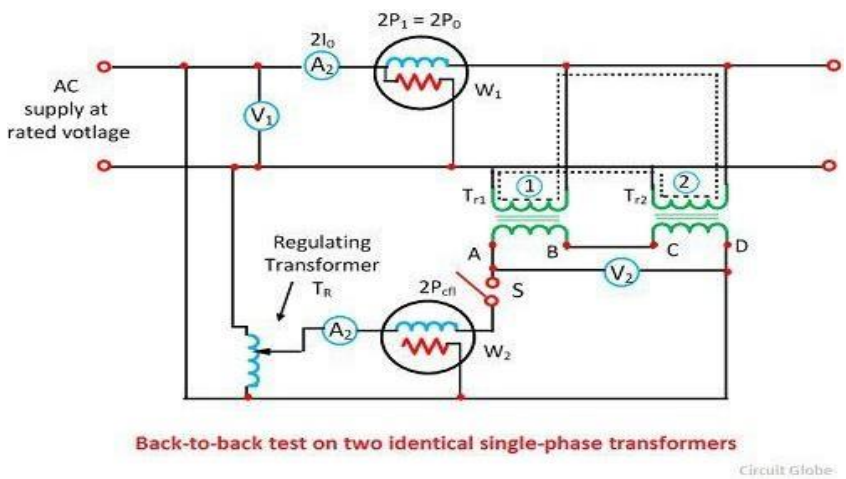

Back-to-back test on two identical single-phase transformers

The above figure shows that the terminal B and C are connected to each other, and the voltage is measured across the terminal A and D.

Finding Losses with Sumpner's Test on Transformer

The secondaries of the transformer are so connected that their potentials are in opposition to each other. This would so if VAB = VCD and A is joined to C whilst B is joined to D. In that case, there would be no secondary current flowing around the loop formed by the two secondaries. T is an auxiliary low-voltage transformer [Regulation Transformer].which can be adjusted to give a variable voltage and hence current in the secondary loop circuit. By proper adjustment of T, full-load secondary current I2 can be made to flow as shown. It is seen, that I2 flows from D to C and then from A to B. Flow of I1 is confined to the loop FEJLGHMF and it does not pass through W1. Hence, W1continues to read the core loss and W2 measures full-load Cu loss (or at any other load current value I2). Obviously, the power taken in is twice the losses of a single transformer.

i.e. copper loss per transformer PCu = W2/2.
i.e. iron loss per transformer Pi = W1/2.

From results of sumpner's test, the full load efficiency of each transformer can be given as

$$\text{\% full load efficiency of each transformer} = \frac{\text{output}}{\text{output} + \frac{W_1}{2} + \frac{W_2}{2}} \times 100$$

Advantages of Sumpner's Test

1. Low power is required to conduct this test. Because no external load is connecting
2. Full load copper losses and iron losses of both transformers determined.
3. Increase in transformer temperature can be found.

Determination of Temperature Rise

The temperature rise of the transformer is determined by measuring the temperature of their oil after every particular interval of time. The transformer is operating back to back for the long time which increases their oil temperature. By measuring the temperature of their oil the withstand capacity of the transformer under high temperature is determined.

Determination of Iron Loss

The wattmeter W_1 measures the power loss which is equal to the iron loss of the transformer. For determining the iron loss, the primary circuit of the transformer is kept closed. Because of the primary closed circuit, no current flows through the secondary windings of the transformer. The secondary winding behaves like an open circuit. The wattmeter is connected to their secondary terminal for the measurement of iron loss.

Determination of Copper Loss

The copper loss of the transformer is determined when the full load current flows through their primary and secondary windings. The additional regulating transformer is used for exciting the secondary windings. The full load current flows from the secondary to the primary winding. The wattmeter W_2 measures the full load copper loss of the two transformers.

PARALLEL OPERATION OF TRANSFORMERS

Sometimes, it becomes necessary to connect more than one transformer's in parallel, for example, for supplying excess load of the rating of existing transformer. If two or more transformers are connected to a same supply on the primary side and to a same load on the secondary side, then it is called as parallel operation of transformers.

Necessity of Parallel Operation of Transformers:

Why parallel operation of transformers is needed?

- **Increased Load:** When load is increased and it exceeds the capacity of existing transformer, another transformer may be connected in parallel with the existing transformer to supply the increased load.
- **Non-availability of large transformer:** If a large transformer is not available which can meet the total requirement of load, two or more small transformers can be connected in parallel to increase the capacity.
- **Increased reliability:** If multiple transformers are running in parallel, and a fault occurs in one transformer, then the other parallel transformers still continue to serve the load. And the faulty transformer can be taken out for the maintenance.
- **Transportation is easier for small transformers:** If installation site is located far away, then transportation of smaller units is easier and may be economical.

Conditions for parallel operation of Transformers:

There are various conditions that must fulfill for the successful operation of transformers as follows.

1. The line voltage ratio of two transformers must be equal.
2. The per unit impedance of each transformer should be equal and they should have same ratio of equivalent leakage reactance to the equal resistance(X/R).
3. The transformers should have same secondary winding polarity.
4. The Transformers should have same phase sequence (Three phase transformer)
5. The transformers should have the zero relative phase replacement between the secondary line voltages.(Three phase transformers)

1) The line voltage ratios of the two transformers must be equal

This condition is used to avoid the inequality EMF induction at the two secondary windings. If the two transformers connected in parallel have slightly different voltage ratios, then due the inequality of induced emfs in the secondary voltages, a circulating current will flow in a loop format in the secondary windings. This current is greater than the no load current and will be quite high due to less leakage impedance

during load. When the secondary windings are loaded, this circulating current will tend to unequal loading on two transformers and one transformer may be over loaded and another may be less loaded.

2) Equal per unit leakage impedance

If the ratings or line voltages are equal their per unit leakage impedance's should be equal in order to have equal load sharing of the both transformers. If the ratings are unequal then the transformer which has less rating will draw more current and it leads to unequal load sharing. It may also lead to mismatch in line voltages due to voltage drops. In other words, for unequal ratings, the numerical values of their impedance's should be in inverse proportional to their ratings to have current in them in line with their ratings.

A difference in the ratio of the reactance value to the resistance value of the impedance results in different phase angles of the currents carried by the two parallel transformers. Due to this phase angle difference between voltage and current, one transformer may be working on high power factor and another transformer may be working on lower factor. Hence real power sharing is not proportional between the two transformers.

3) The transformers should have same secondary winding polarity

The transformers should be properly connected with regards to their polarity. If they are connected with in correct polarities then the two emf's induced in the secondary winding which are in parallel, will act together and produce a short circuit between the two of them. Total loss of power supply and high damage to the transformers.

4) The Transformers should have same phase sequence

In case of three winding transformers in-addition to the above conditions the phase sequence of line voltages of the both transformers must be identical for parallel operation. If the phase sequence is not correct in every voltage cycle each pair of phases will get shorted

5) The transformers should have zero relative phase displacement between the secondary line voltages

This condition indicates that the two secondary line voltages should have zero phase displacement which avoids UN-intended short circuit between the phases of two windings.

There are four groups which in to which the three phase windings connections are classified:

- Group 1: Zero phase displacement (Yy0,Dd0,Dz0)
- Group2: 180^0 Phase displacement (Yy6,Dd6,Dz6)
- Group3: -30^0 Phase displacement (Ys1,Dy1,Yz1)
- Group4: $+30^0$ Phase displacement(Yd11,Dy11,Yz11)

The letters Y,D and z represents the Star, Delta and zigzag type winding connections. In order to have zero phase displacement of secondary side line voltages, the transformers belonging to the same group can be paralleled. For example with Yd1 and Dy1 can be paralleled. The transformers of groups 1 and 2 can be paralleled with their own group where as the transformers of group 3 and 4 can be paralleled by revering the phase sequence of one of them. For example a transformer with Yd11 connection of group 4 can be paralleled with that having Dy1 connection by reversing the phase sequence of both primary and secondary terminals of the Dy1 transformer.

THREE PHASE TRANSFORMER

Three phase transformers are more economical for supplying large loads and large power distribution. Even though most of the utilization equipments are connected by the single phase transformers, these are not preferred for large power distribution in the aspect of economy.

The three phase power is used in almost all fields of electrical power system such as power generation, transmission and distribution sectors, also all the industrial sectors are supplied or connected with three phase system. Therefore, to step-up (or increase) or step-down (or decrease) the voltages in the three phase systems, three phase transformers are used. As compared with the single phase transformer, there are numerous advantages with 3 phase transformer such as smaller and lighter to construct for the same power handling capacity, better operating characteristics, etc.

Fig: Three Phase Transformer

Three phase transformers are used to step-up or step-down the high voltages in various stages of power transmission system. The power generated at various generating stations is in three phase nature and the voltages are in the range of 13.2KV or 22KV. In order to reduce the power loss to the distribution end, the power is transmitted at somewhat higher voltages like 132 or 400KV. Hence, for transmission of the power at higher voltages, three phase step-up transformer is used to increase the voltage. Also at the end of the transmission or distribution, these high voltages are step-down to levels of 6600, 400, 230 volts, etc. For this, a three phase step down transformer is used.
A three phase transformer can be built in two ways; a bank of three single phase transformers or single unit of three phase transformer.

The former one is built by suitably connecting three single phase transformers having same ratings and operating characteristics. In this case if the fault occurs in any one of the transformers, the system still retained at reduced capacity by other two transformers with open delta connection. Hence, continuity of

the supply is maintained by this type of connection. These are used in mines because easier to transport individual single phase transformers.

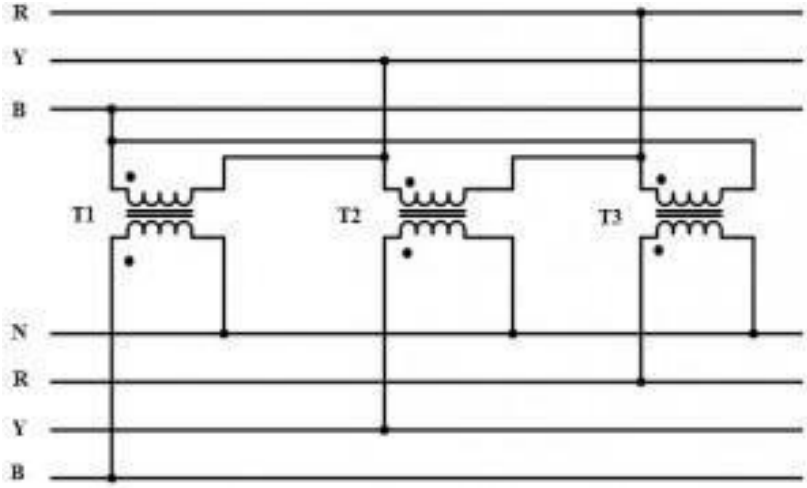

Fig: Three phase transformer

Instead of using three single phase transformers, a three phase bank can be constructed with a single three phase transformer consisting of six windings on a common multi-legged core. Due to this single unit, weight as well as the cost is reduced as compared to three units of the same rating and also windings, the amount of iron in the core and insulation materials are saved. Space required to install a single unit is less compared with three unit bank. But the only disadvantage with single unit three phase transformer is if the fault occurs in any one of the phase, then entire unit must be removed from the service.

Construction of Three Phase Transformers:

A three phase transformer can be constructed by using common magnetic core for both primary and secondary windings. As we discussed in the case of single phase transformers, construction can be core type or shell type. So for a bank of three phase core type transformer, three core type single phase transformers are combined. Similarly, a bank of three phase shell type transformer is get by properly combining three shell type single phase transformers. In a shell type transformer, EI laminated core surrounds the coils whereas in core type coil surrounds the core.

Core Type Construction:

In core type three phase transformer, core is made up of three limbs or legs and two yokes. The magnetic path is formed between these yokes and limbs. On each limb both primary and secondary windings are wounded concentrically. Circular cylindrical coils are used as the windings for this type of transformer. The primary and secondary windings of one phase are wounded on one leg. Under balanced condition, the magnetic flux in each phase of the leg adds up to zero. Therefore, under normal conditions, no return leg is needed. But in case of unbalanced loads, high circulating current flows and hence it may be best to use three single phase transformers.

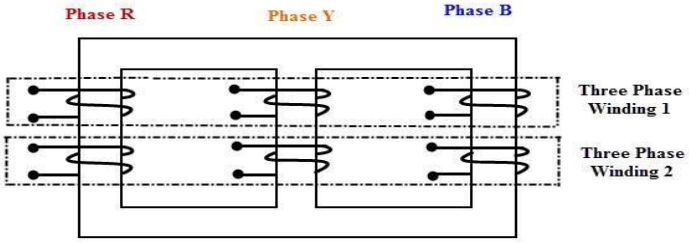

Fig: Core Type transformer

Shell Type Construction:

In shell type, three phases are more independent because each phase has independent magnetic circuit compared with core type transformer. The construction is similar to the single phase shell type transformer built on top of another. The magnetic circuits of this type of transformer are in parallel. Due to this, the saturation effects in common magnetic paths are neglected. However, shell type constructed transformers are rarely used in practice.

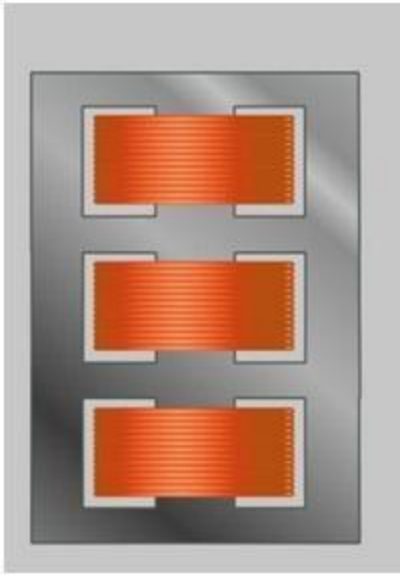

Fig: Shell Type

Working of Three Phase Transformers:

Consider the below figure in which the primary of the transformer is connected in star fashion on the cores. For simplicity, only primary winding is shown in the figure which is connected across the three phase AC supply. The three cores are arranged at an angle of 120 degrees to each other. The empty leg of each core is combined in such that they form center leg as shown in figure.

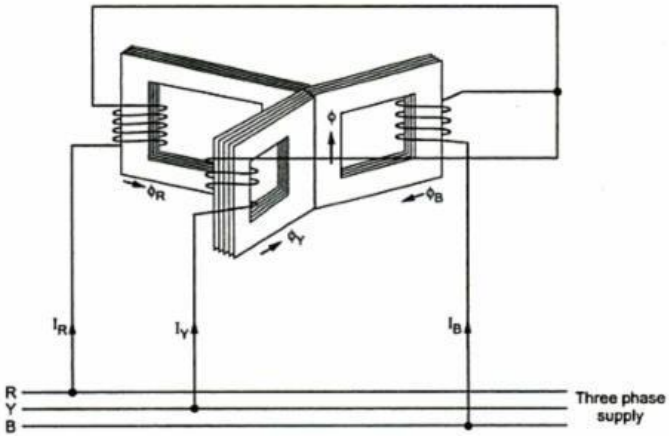

Fig: Working of Three Phase Transformer

Working of a transformer:

When the primary is excited with the three phase supply source, the currents IR, IY and IB are starts flowing through individual phase windings. These currents produce the magnetic fluxes ΦR, ΦY and ΦB in the respective cores. Since the center leg is common for all the cores, the sum of all three fluxes are carried by it. In three phase system, at any instant the vector sum of all the currents is zero. In turn, at the instant the sum of all the fluxes is same. Hence, the center leg doesn't carry any flux at any instant. So even if the center leg is removed it makes no difference in other conditions of the transformer.

Likewise, in three phase system where any two conductors acts as return for the current in third conductor, any two legs acts as a return path of the flux for the third leg if the center leg is removed in case of three phase transformer. Therefore, while designing the three phase transformer, this principle is used.

These fluxes induce the secondary EMFs in respective phase such that they maintain their phase angle between them. These EMFs drives the currents in the secondary and hence to the load. Depends on the type of connection used and number of turns on each phase, the voltage induced will be varied for obtaining step-up or step-down of voltages.

THREE PHASE TRANSFORMER CONNECTIONS:

Three phase transformer connections in three phase system, the three phases can be connected in either star or delta configuration. In case you are not familiar with those configurations, study the following image which explains star and delta configuration. In any of these configurations, there will be a phase difference of 120° between any two phases.

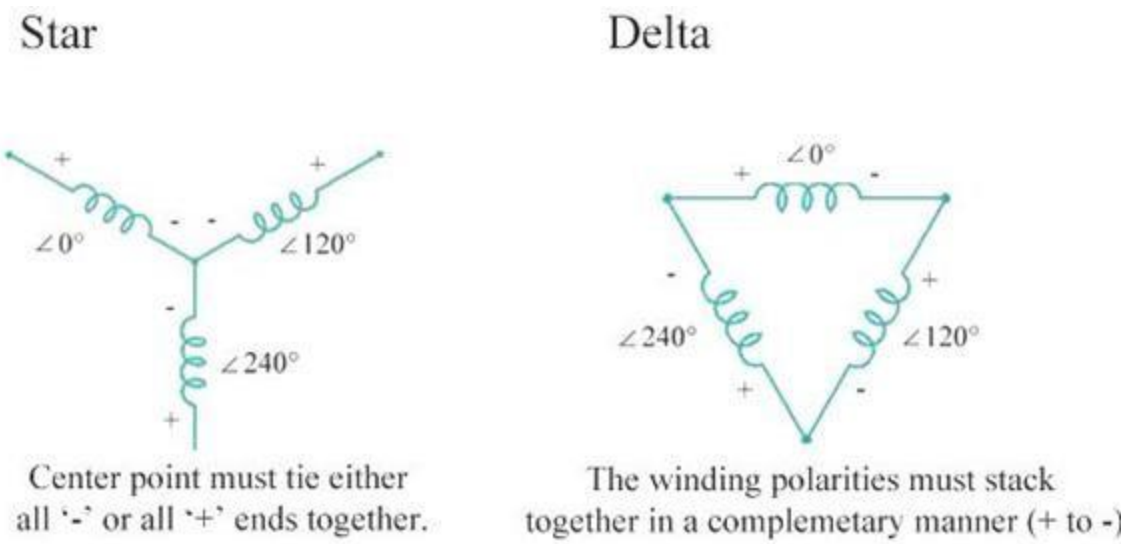

Three Phase Transformer Connections

Windings of a three phase transformer can be connected in various configurations as (i) star-star, (ii) delta-delta, (iii) star-delta, (iv) delta-star, (v) open delta and (vi) Scott connection. These configurations are explained below.

Star-Star (Y-Y)

- Star-star connection is generally used for small, high-voltage transformers. Because of star connection, number of required turns/phase is reduced (as phase voltage in star connection is $1/\sqrt{3}$ times of line voltage only). Thus, the amount of insulation required is also reduced.
- The ratio of line voltages on the primary side and the secondary side is equal to the transformation ratio of the transformers.
- Line voltages on both sides are in phase with each other.
- This connection can be used only if the connected load is balanced.

Delta-Delta (Δ-Δ)

- This connection is generally used for large, low-voltage transformers. Number of required phase/turns is relatively greater than that for star-star connection.
- The ratio of line voltages on the primary and the secondary side is equal to the transformation ratio of the transformers.

- This connection can be used even for unbalanced loading.
- Another advantage of this type of connection is that even if one transformer is disabled, system can continue to operate in open delta connection but with reduced available capacity.

Star-Delta OR Wye-Delta (Y-Δ)

- The primary winding is star (Y) connected with grounded neutral and the secondary winding is delta connected.
- This connection is mainly used in step down transformer at the substation end of the transmission line.
- The ratio of secondary to primary line voltage is $1/\sqrt{3}$ times the transformation ratio.
- There is 30° shift between the primary and secondary line voltages.

Delta-Star OR Delta-Wye (Δ-Y)

- The primary winding is connected in delta and the secondary winding is connected in star with neutral grounded. Thus it can be used to provide 3-phase 4-wire service.
- This type of connection is mainly used in step-up transformer at the beginning of transmission line.
- The ratio of secodary to primary line voltage is $\sqrt{3}$ times the transformation ratio.
- There is 30° shift between the primary and secondary line voltages.

Above transformer connection configurations are shown in the following figure.

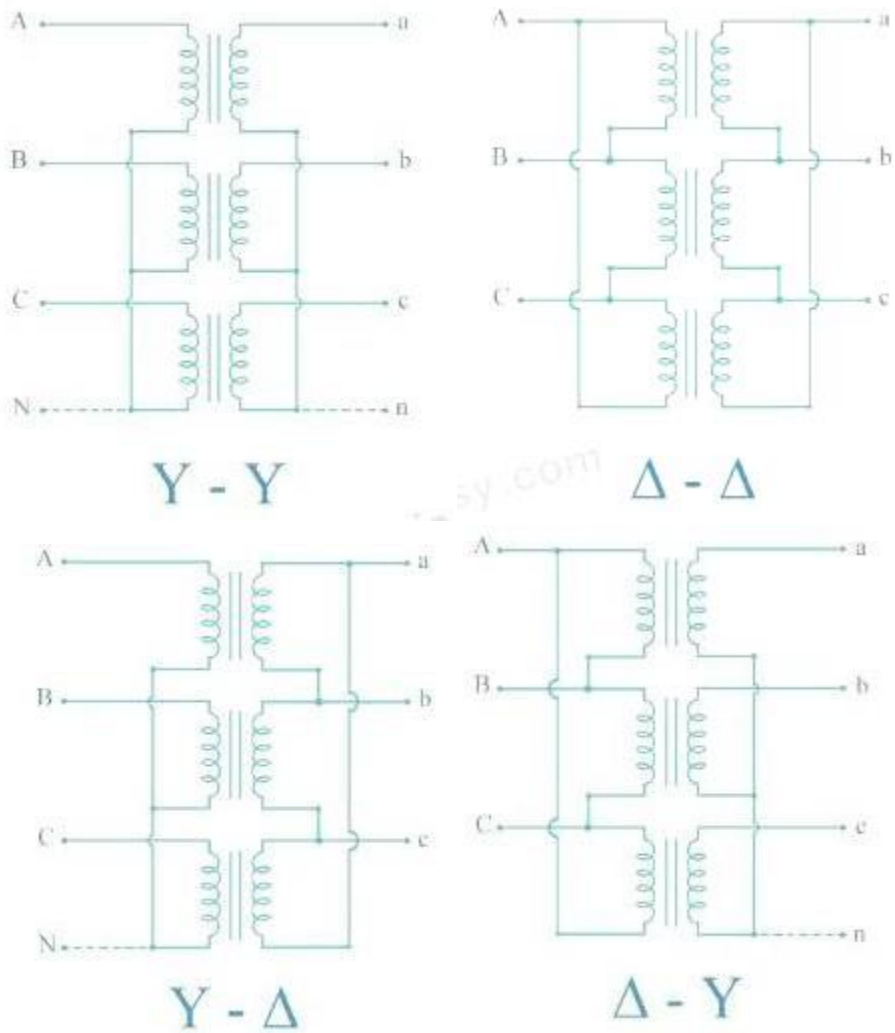

Fig: Three phase transformer connections

THREE PHASE TO SIX PHASE CONVERSION

In certain applications like thyristors and rectifiers six phase supply is required. Therefore it becomes necessary to convert three phase a.c. supply into six phase. By using three identical single phase transformers suitably interconnected this can be achieved. The primary winding is connected in delta whereas its secondary winding is split up into two halves. Thus conversion from 3 phase to six phase can be obtained by having two similar secondary windings for each of the primaries of the three phase transformer. This is showing in the Fig. 1.

The three phase supply is given to primaries of the three transformers and six phase output can be obtained from the six secondaries as shown. There are many ways of connecting these secondaries. Some of them are i) double delta ii) double star iii) dimetrical. The dimetrical connection is generally used in practice.

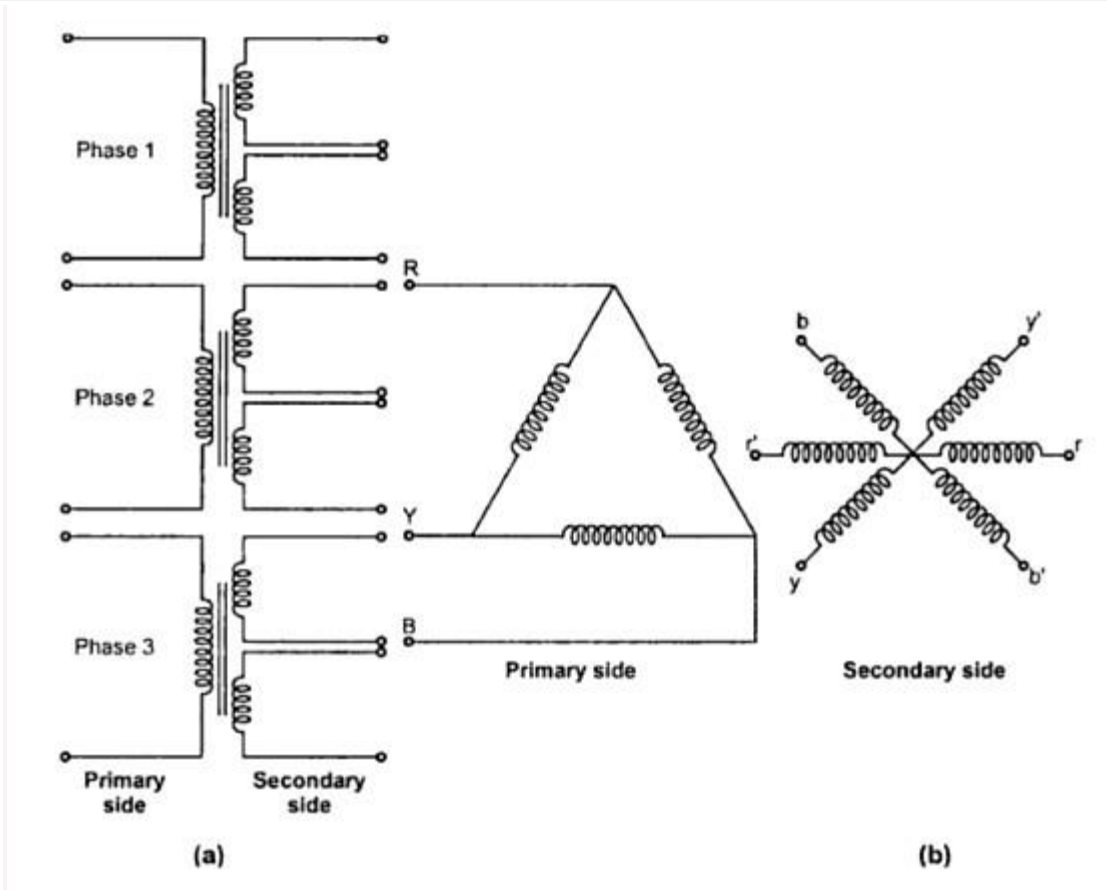

Fig. 1 The double delta connection

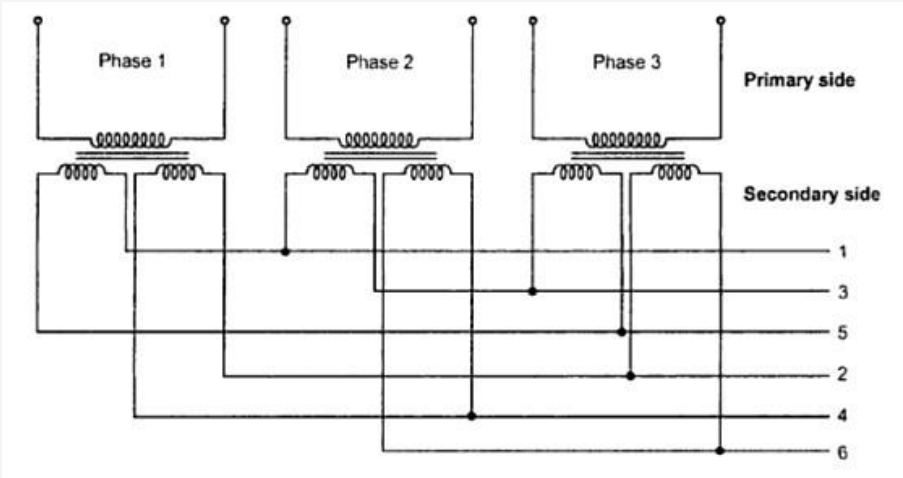

Fig. 2 The double delta connection

As seen from the Fig.2 this arrangement of secondaries connections are taken from points 1, 3, 5 and in the second set, the connection are taken from points 2, 4 and 6.

The double star connection for obtaining 6 phase supply is shown in the Fig.3.

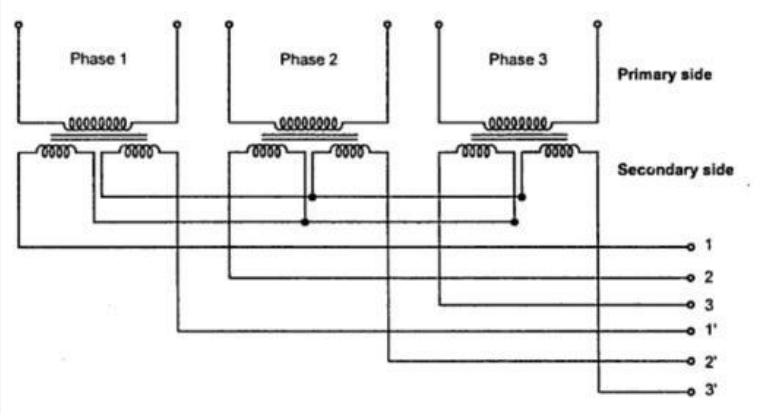

Fig. 3 The double star connection

Six equal voltages with a phase displacement of is obtained which is indicated in the phasor diagram shown in the Fig. 4. The primary windings may be either connected in delta or in star. If the primaries are connected in star then care must be taken that the neutral point of the star connection must be connected to the neutral of the generator to avoid the difficulties due to floating neutral and triple frequency currents.

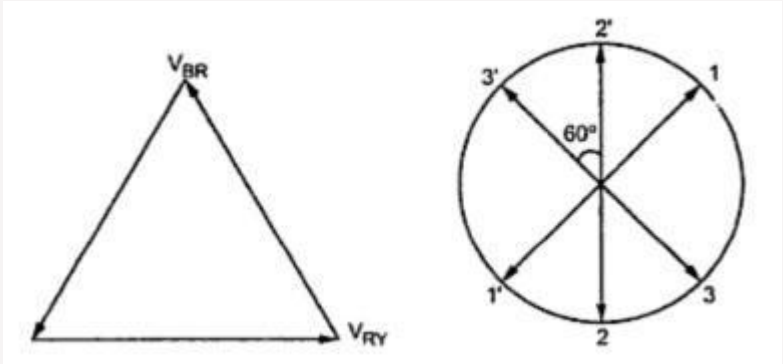

Fig. 4 Phasor diagram shown

In the case of six phase rectifier, the star point or the neutral point formed by the coils serves as the neutral point of the d.c. supply from the rectifier.

The most commonly used connection is the dimetrical connection for three phase to six phase transformers. It is shown in the Fig. 5. On each single phase transformer there is only one winding on the secondary side. The two secondary leads are connected to diametrically opposite points on the armature windings of the synchronous converter. The middle points of the secondary windings may be connected together to form a neutral for the three wire circuit. The high voltage or primary windings are either connected in star or delta. But delta connection is generally preferred because of the triple frequency harmonics of voltages which are introduced in star-star connection.

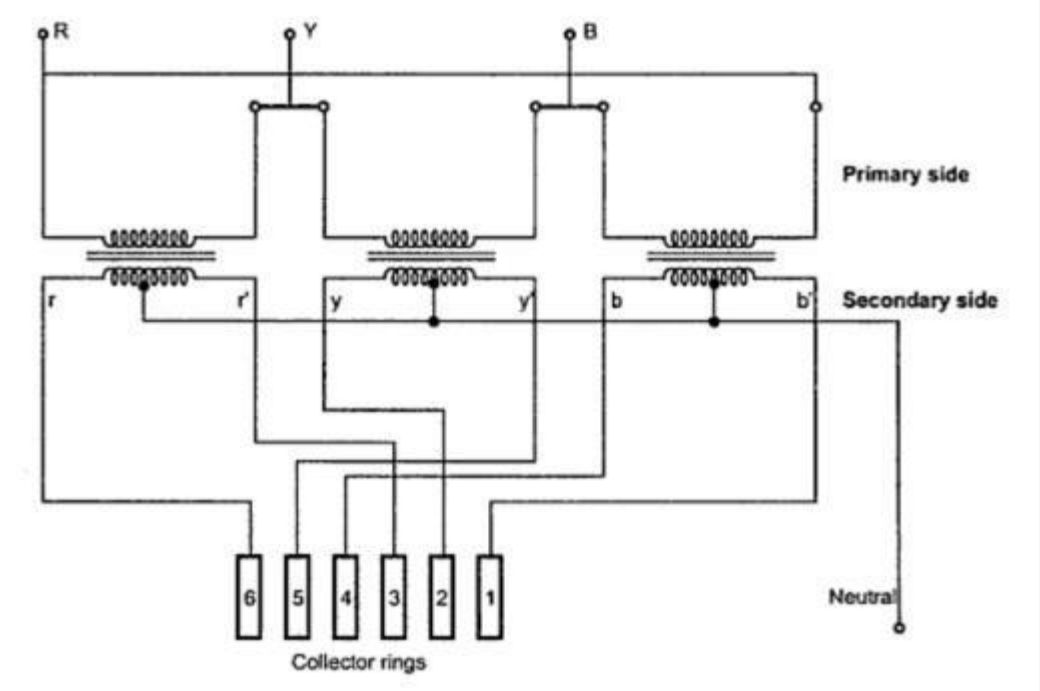

Fig. 5 Dimetrical connection

The corresponding phasor diagram is shown in the Fig.6.

Fig. 6 Phasor diagram

OPEN DELTA CONNECTION:

In three phase systems, the use of transformers with three windings (or legs) per side is common. These three windings are often connected in delta or star, resulting in common transformer configurations such as delta-delta or delta-star. An open delta transformer is a special arrangement which uses only two windings.

Transformer Configuration

The illustration shows how an open delta transformer is connected. On both the primary and secondary there are only two windings. Even in this configuration, it is still possible to transform a three phase voltage.

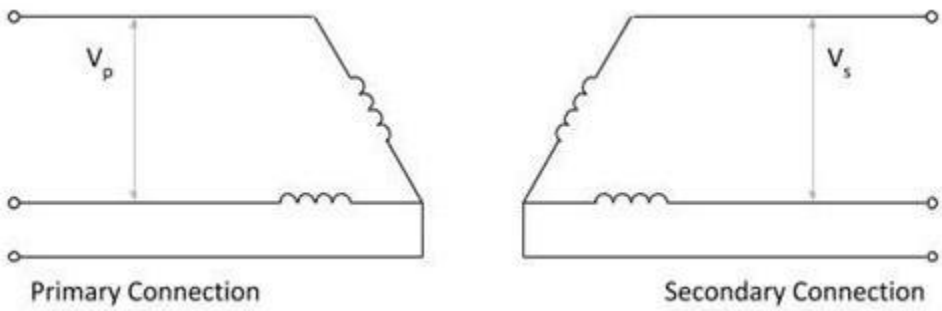

Open Delta Transformer

Open delta transforms are not the commonly used. Typically they would be used for small loads where cost is important. Alternatively, they could be used as an emergency measure, should one winding only of a transformer fail.
Sometimes you may hear an open delta transformer referred to as a V-connection transformer.

Power Delivered:

Sometimes the power delivered by an open delta transformer is compared to that of an equivalent three winding transformer. Typically figures like having 57.7% of the capacity of an equivalent three winding transformer or 87% of two transformers (same winding size) are quoted. While you can think of the transformer in this manner, it is more fruitful not to consider comparisons but to the necessary calculations on the open delta transformer.

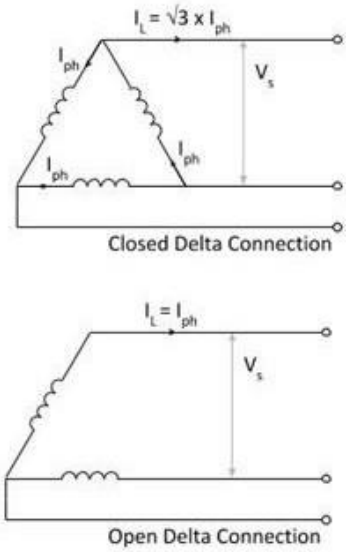

Consider the illustration, showing the output from both a close delta and open delta transformer. Note, that in the delta connection to line current is √3 times the phase current, whereas in the open delta, they are the same.
The transformer output power (in VA) is for a balanced transformer system for the closed delta connection (using phase current), this give:

$VA=3V_L I_{ph}$

And for the open delta connection:

$VA= I_{ph}\overline{}$

Taking the ratio of open delta to closed delta power, gives:

=0.577(or 57.7%)

Open delta transformers are three phase devices, with only two windings on each of the primary and secondary sides. While cheaper than a conventional three winding transformer, the open delta will only deliver 57.7% of the power of a conventional transformer (not two thirds, 66.7% as may be expected). There is limited adoption of open delta transformers, although they can be useful in certain situations.

Power Factor with Two Transformers in 3-Phase Open-Delta Configuration:

The power factor of a typical T/F is 0.866, so the max output (KVA) of a T/F will be 86.6% of its rated capacity. Suppose we have three transformers each having the same rating (50 KVA). Then the total capacity is equal to 150 * 0.866=130 KVA and not 150 KVA. (The factor 0.866 is called the Utility Factor.)

If one transformer is removed, the total output of two T/Fs will be 100 * 0.866=86.6 KVA. From this calculation, we see that output capacity is reduced when a Delta-Delta configuration is operated as an Open-Delta connection, i.e. with one T/F removed.

Let say the two T/Fs of Open-Delta configuration are supplying 3-phase power to a load having power factor Cosα. The power factor of one T/F is Cos(30-α) and the other is Cos(30+α).

Power (T/F1)=KVA Cos(30-α) and

Power(T/F2)= KVACos(30+α)

- Case (i): When phase angle (α=0) is zero, mean load p.f=1 - each transformer has power factor = Cos30 = 0.866
- Case (ii):When phase angle is 30(α=30), mean load p.f=0.866, one T/F will have p.f of cos(30-30) = Cos0 = 1 and the other will be operating at p.f of Cos(30+30) = Cos60 = 0.866
- Case(iii):When phase angle is 60 (α=60), mean load p.f=0.5, then one T/F will have p.f of Cos(30-60) = 0.866 and other will have a p.f of Cos(30+60) = Cos90 = 0.

From the third scenario we conclude that if we have a transformer Open-Delta configuration in which one T/F is transferring power to an entire load at a p.f of 0.866, then the other one will not provide any load.

Applications of Open-Delta configurations:

- Widely used for small 3-phase loads.
- Used in applications where the current load is less, and may increase in future.
- There is no relative shift in output, so can be used for unbalanced loads and where harmonics are involved.

SCOTT CONNECTION OF TRANSFORMERS:

Definition: The Scott-T Connection is the method of connecting two single phase transformer to perform the 3-phase to 2-phase conversion and vice-versa. The two transformers are connected electrically but not magnetically. One of the transformers is called the main transformer, and the other is called the auxiliary or teaser transformer.

The figure below shows the Scott-T transformer connection. The main transformer is centre tapped at D and is connected to the line B and C of the 3-phase side. It has primary BC and secondary a_1a_2. The teaser transformer is connected to the line terminal A and the centre tapping D. It has primary AD and the secondary b_1b_2

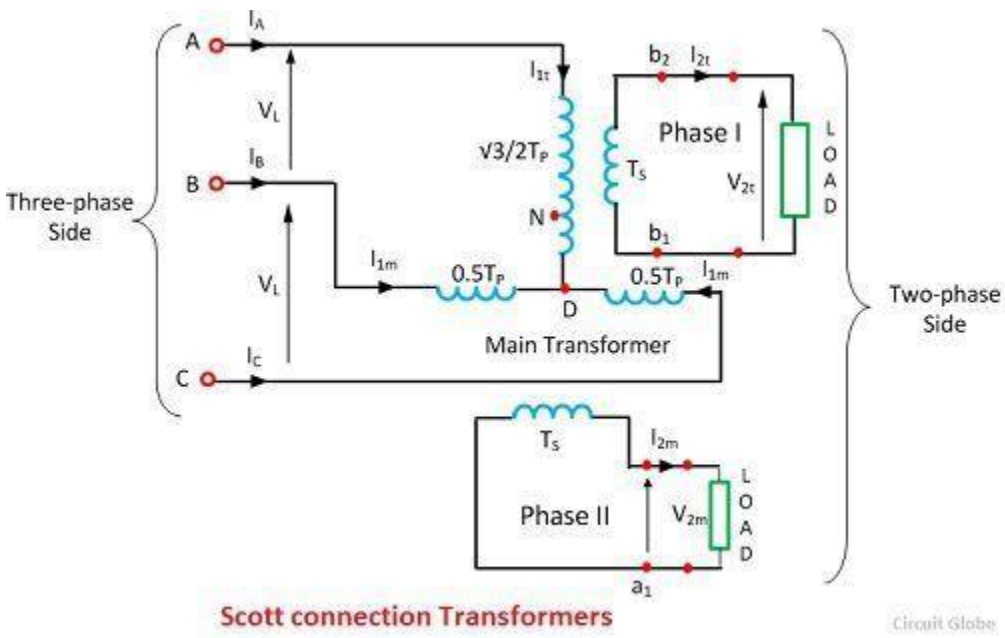

The identical, interchangeable transformers are used for Scott-T connection in which each transformer has a primary winding of T_p turns and is provided with tapping at $0.289T_p$, $0.5T_p$and $0.866\ T_p$.

Phasor Diagram of Scott Connection Transformer

The line voltages of the 3-phase system V_{AB}, V_{BC}, and V_{CA} which are balanced are shown in the figure below. The same voltage is shown as a closed equilateral triangle. The figure below shows the primary windings of the main and the teaser transformer.

$$|V_{AB}| = |V_{BC}| = |V_{CA}| = |V_L|$$

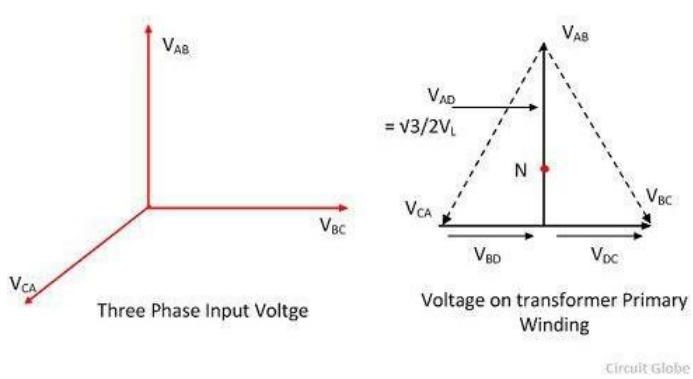

The D divides the primary BC of the main transformers into two halves and hence the number of turns in portion BD = the number of turns in portion DC = $T_p/2$.The voltage V_{BD} and V_{DC} are equal, and they are in phase with V_{BC}.

$$V_{BD} = V_{DC} = \frac{1}{2}V_{BC} = \frac{1}{2}V_L < 0°$$

The voltage between A and D is

$$V_{AD} = V_L\left(-\frac{1}{2} + j\frac{\sqrt{3}}{2}\right) + \frac{1}{2}V_L$$

$$V_{AD} = V_L\left(j\frac{\sqrt{3}}{2}\right) = 0.866V_L < 90°$$

The teaser transformer has the primary voltage rating that is √3/2 or 0.866 of the voltage ratings of the main transformer. Voltage V_{AD} is applied to the primary of the teaser transformer and therefore the secondary of the voltage $V_{2t}$of the teaser transformer will lead the secondary terminal voltage V_{2m} of the main transformer by 90º as shown in the figure below.

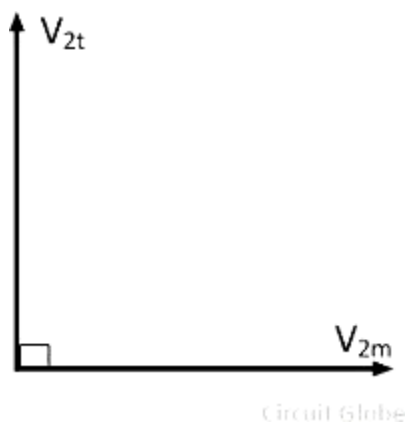

Fig: secondary Phasor diagram

Then,

$$\frac{V_{S_1}}{V_{AD}} = \frac{T_S}{T_{AD}}$$

$$V_{2t} = \frac{T_S}{T_{AD}}V_{AD} = \frac{T_S}{\frac{\sqrt{3}}{2}T_P} \times \frac{\sqrt{3}V_t}{2}$$

$$\frac{T_S}{T_P}V_L = v_{2m}$$

For keeping the voltage per turn same in the primary of the main transformer and the primary of the teaser transformer, the number of turns in the primary of the teaser transformer should be equal to $\sqrt{3}/2T_p$.

Thus, the secondaries of both transformers should have equal voltage ratings.The V_{2t} and V_{2m} are equal in magnitude and 90º apart in time; they result in the balanced 2-phase system.

Position of Neutral Point (N)

The primary of the two transformers may have a four wire connection to a 3-phase supply if the tapping N is provided on the primary of the teaser transformer such that

The voltage across AN = V_{AN} = phase voltage = $V_l/\sqrt{3}$.

Since the voltage across the portion AD.

$$V_{AD} = \frac{\sqrt{3}}{2} V_L$$

the voltage across the portion ND

$$V_{ND} = V_{AD} - V_{AN} = \frac{\sqrt{3}}{2} V_L - \frac{V_L}{\sqrt{3}} = \frac{V_L}{2\sqrt{3}}$$

The same voltage turn in portion AN, ND and AD are shown by the equations,

$$T_{AN} = \frac{T_P}{\sqrt{3}} = 0.577 T_P$$

$$T_{ND} = \frac{T_P}{2\sqrt{3}} = 0.288 T_P$$

$$T_{ND} = \frac{\sqrt{3} T_P}{2} = 0.866 T_P$$

$$\frac{T_{AN}}{T_{ND}} = \frac{T_P}{\sqrt{3}} + \left(\frac{T_P}{2\sqrt{3}}\right) = 2$$

The equation above shows that the neutral point N divides the primary of the teaser transformer in ratio.

AN : ND = 2 : 1

Applications of Scott Connection:

The following are the applications of the Scott-T connection.

1. The Scott-T connection is used in an electric furnace installation where it is desired to operate two single-phase together and draw the balanced load from the three-phase supply.
2. It is used to supply the single phase loads such as electric train which are so scheduled as to keep the load on the three phase system as nearly as possible.

3. The Scott-T connection is used to link a 3-phase system with a two–phase system with the flow of power in either direction.

The Scott-T connection permits conversions of a 3-phase system to a two-phase system and vice versa. But since 2-phase generators are not available, the converters from two phases to three phases are not used in practice.

AUTOTRANSFORMER

A Transformer, in which a part of the winding is common to both the Primary and Secondary circuit, is called an Auto Transformer. It shall be noted that in Two Winding Transformer, Primary and Secondary windings are electrically isolated but in Auto Transformer, the two windings are not electrically isolated.

Why do we need to go for Auto Transformer?

We have some advantages of auto-transformer over normal two winding transformers.

1. Autotransformers usually smaller in size, because one winding is eliminated.
2. As size is small cost also low(so cheap in cost)
3. As the winding is same so leakage reactance will be less.
4. Increased kVA rating.

PRINCIPLE OF OPERATION OF AUTOTRANSFORMER:

The principle of operation of the transformer is the same as the one of the common transformer, and then the relation between input and output voltages and input and output currents and the ratio of number of turns between the primary and the secondary winding is the same.

The currents of the primary and secondary windings are flowing on the opposite directions, so the total current flowing through the common part of the winding is equal to the difference between the current on the low-voltage winding and the current on the high-voltage winding.

A simplified diagram of a Step-down Auto Transformer is shown in figure below.

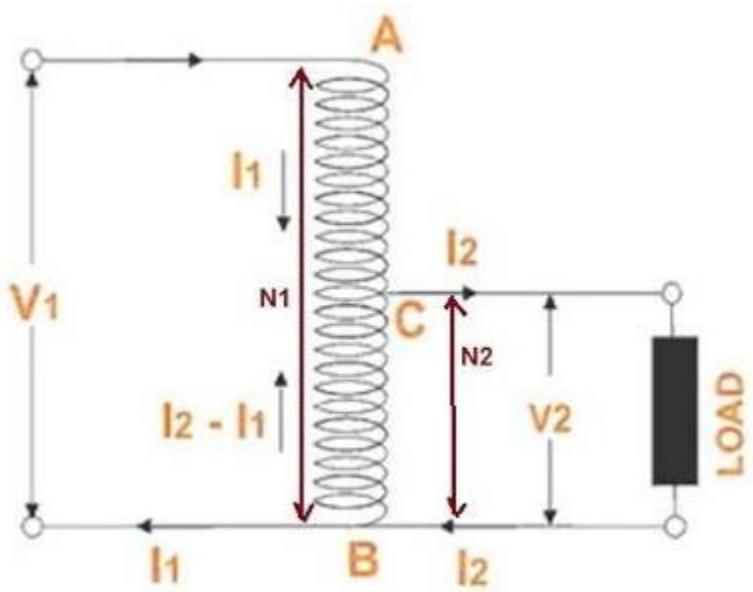

Fig: Auto transformer

As shown in the figure above, N_1 and N_2 are the number of turns between winding AB and AC respectively. If a voltage $V_1$is applied across AB, an exciting current will start flowing through the full winding. Therefore, voltage per turn in winding AB is $V_1/N_1$and hence voltage across CB is $(V_1/N_1)N_2$.
As the load current is $I_2$and the current taken from the source is I1, neglecting losses

Input Power = Output Power

$V_1I_1Cos\emptyset_1= V_2I_2Cos\emptyset_2$..... (1)

Assuming internal impedance drop and losses to be negligible, power factor for primary and secondary will be almost same.

$Cos\emptyset_1 = Cos\emptyset_2$

Therefore from equation (1),

$V_1I_1 = V_2I_2$

So,

$V_2 / V_1= I_1 / I_2 = N_2 / N_1 =k$(say)

In our case of Step down Auto Transformer, k<1

Again, since the direction of flow of load current is in the opposite to the current flowing in the Primary because of Lenze's Law, hence the current flowing in winding BC = (I_2-I_1)

$I_{CB} = (I_2 – I_1)$

Now the primary MMF = I_{AC} (N_1-N_2)

$= I_1 (N_1– N_2)$

$= N_1I_1– N_2I_1$

But $N_1 / N_2= I_2 / I_1$

So, $N_1I_1= N_2I_2$

Therefore,

Now the primary MMF = $N_2I_2– N_2I_1$

$= (I_2– I_1) N_2$

$= I_{CB} N_2$ = Secondary MMF

Thus we see that in Auto Transformer, Transformer action take place between winding AC and BC. Thus VA of winding AC will be transferred to winding BC by Transformer action.
Therefore,

Transformed VA = V_{AB} I_{AB}

= (V_1-V_2) I_1 .....(2)

Now, total VA input = V_1 I_1

Therefore,

Transformed VA / Input VA = $[(V_1-V_2)\ I_1] / V_1I_1$

= $1 – V_2/V_1$

= 1-k

Thus we see that out of total input VA, only a part of it is transformed by Transformer action and remaining is therefore transferred by conduction.

So,

Conducted VA = Total Input – Transformed VA

= $V_1I_1 – (V_1-V_2)\ I_1$ .....From equation (1)

= V_2I_1

So,

Conducted VA / Input VA = V_2I_1/ V_1I_1

= V_2/V_1= k

Thus in an Auto Transformer, a part of input power is delivered to the load by Transformer action while the remaining is by conduction method. Power transfer because of conduction method is possible in Auto Transformer because a part of winding is common to both the primary as well as secondary circuit.

EQUIVALENT CIRCUIT OF AUTOTRANSFORMER:

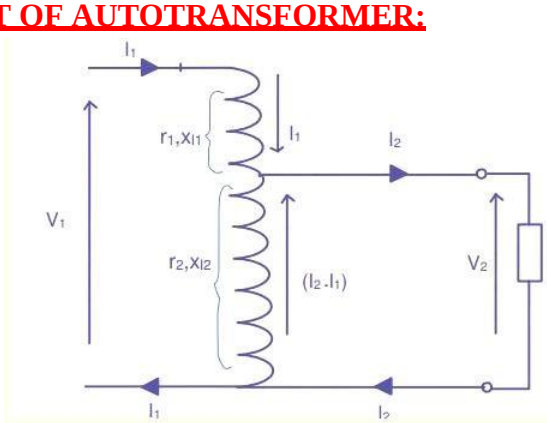

Fig: Auto transformer on load

As mentioned earlier the magnetizing current can be neglected, for simplicity. Writing the Kirchoff's equation to the primary and secondary

we have

$V1 = E1 + I1(r1 + jxl1) - (I2 - I1)(r2 + jxl2)$

Note that the resistance r1 and leakage reactance xl1 refer to that part of the winding where only the primary current flows. Similarly on the load side

we have,

$E2 = V2 + (I2 - I1)(r2 + jxl2)$

The voltage ratio V1 : V2 = E1 : E2 = T1 : T2 = a where T1 is the total turns of the primary. Then E1 = aE2 and I2 = aI1

The magnetization branch can now be hung across the mains for completeness. The above equivalent circuit can now be compared with the approximate equivalent circuit of a two winding case Re = r1 + a 2 r2 and Xe = xl1 + a 2xl2. Thus in the case of an auto transformer total value of the short circuit impedance is lower and so also the percentage resistance and reactance. Thus the full load regulation is lower. Having a smaller value of short circuit impedance is sometimes considered to be a disadvantage. That is because the short circuit currents become very large in those cases. The efficiency is higher in auto transformers compared to their two winding counter part at the same load. The phasor diagram of operation for the auto transformer drawing a load current at a lagging power factor angle of θ2 is shown in Fig. 32. The magnetizing current is omitted here again for simplicity.

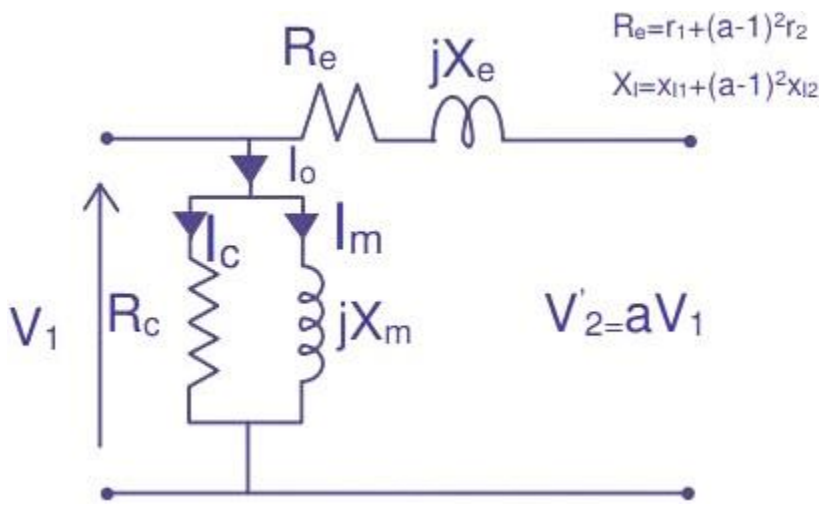

Fig: Equivalent Circuit

From the foregoing study it is seen that there are several advantages in going in for the autotransformer type of arrangement. The voltage/current transformation and impedance conversion aspects of a two winding transformer are retained but with lesser material (and hence lesser weight) used. The losses are reduced increasing the efficiency. Reactance is reduced resulting in better regulation characteristics. All these benefits are enhanced as the voltage ratio approaches unity. The price that is required to be paid is loss of electrical isolation and a larger short circuit current (and larger short circuit forces on the winding).

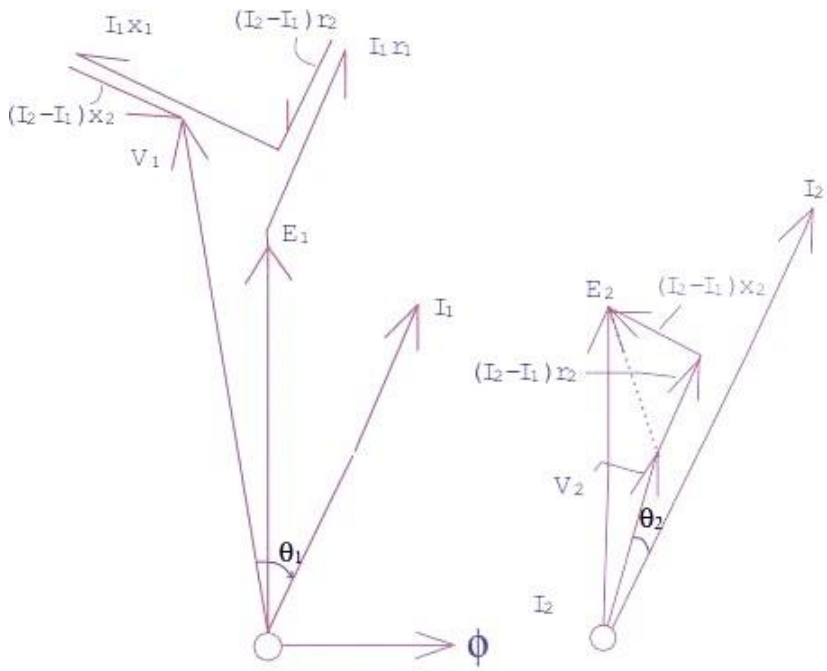

Fig: Phasor Diagram

Advantages of Auto transformer:

- Less costly
- Better regulation
- Low losses as compared to ordinary two winding transformer of the same rating.

Disadvantages of Auto transformer:

There are various advantages of the auto transformer, but then also one major disadvantage, why auto transformer is not widely used, is that

- The secondary winding is not insulated from the primary winding.
  If an auto transformer is used to supply low voltage from a high voltage and there is a break in the secondary winding, the full primary voltage comes across the secondary terminal which is dangerous to the operator and the equipment. So the auto transformer should not be used to for interconnecting high voltage and low voltage system.
- Used only in the limited places where a slight variation of the output voltage from input voltage is required.

Applications of Auto transformer:

- It is used as a starter to give upto 50 to 60% of full voltage to the stator of a squirrel cage induction motor during starting.
- It is used to give a small boost to a distribution cable, to correct the voltage drop.
- It is also used as a voltage regulator
- Used in power transmission and distribution system and also in the audio system and railways.

TAP-CHANGING TRANSFORMERS

The change of voltage is affected by changing the numbers of turns of the transformer provided with taps. For sufficiently close control of voltage, taps are usually provided on the high voltage windings of the transformer. There are two types of tap-changing transformers

1. Off-load tap changing transformer
2. On-load tap changing transformer

Off-load tap-changing transformer:

In this method, the transformer is disconnected from the main supply when the tap setting is to be changed. The tap setting is usually done manually. The off load tap changing transformer is shown in the figure below

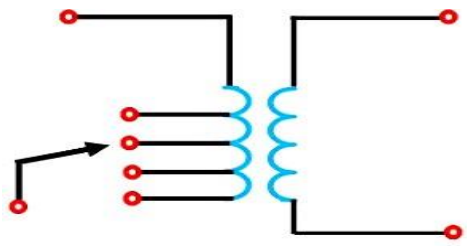

Off-load tap-changing transformer

On-load tap-changing transformer:

In order that the supply may not be interrupted, on-load tap changing transformer is used. Such a transformer is known as a tap-changing under load transformer. While tapping, two essential conditions are to be fulfilled.

- The load circuit should not be broken to avoid arcing and prevent the damage of contacts.
- No parts of the windings should be short–circuited while adjusting the tap.

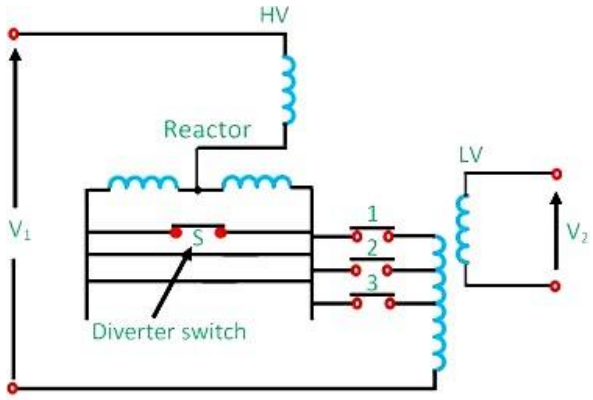

On-load tap changing using a reactor

The tap changing employing a center tapped reactor R show in the figure above. Here S is the diverter switch, and 1, 2, 3 are selector switch. The transformer is in operation with switches 1 and S closed. To change to tap 2, switch S is opened, and 2 is closed. Switch 1 is then opened, and S closed to complete the tap change. It is to be noted that the diverter switch operates on load, and no current flows in the selector switches during tap changing. During the tap change only half of the reactance which limits the

It is to be noted that the diverter switch operates on load, and no current flows in the selector switches during tap changing. During the tap change, only half of the reactance which limits the current is connected in the circuit.

HARMONICS IN THREE PHASE TRANSFORMERS

The harmonic is the distortion in the waveform of the voltage and current. It is the integral multiple of some reference waves. The harmonic wave increases the core and copper loss of the transformer and hence reduces their efficiency. It also increases the dielectric stress on the insulation of the transformer.

In a three-phase transformer, the non-sinusoidal nature of magnetising current produces sinusoidal flux which gives rise to the undesirable phenomenon. The phase magnetising currents in transformer should contain third harmonics and higher harmonics necessary to produce a sinusoidal flux.

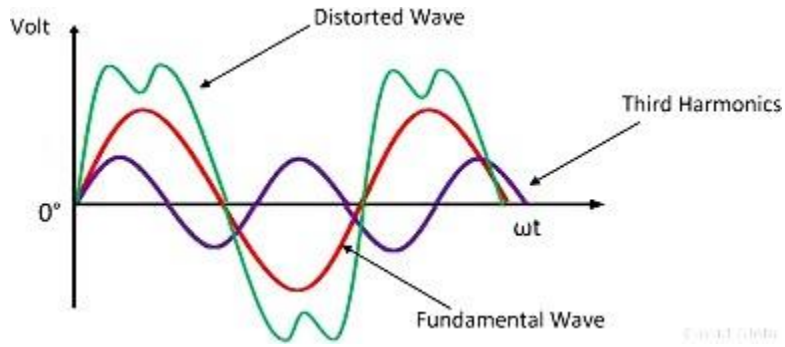

Fig: Harmonics in transformers

If the phase voltage across each phase is to remain sinusoidal, then the phase magnetising currents must be of the following form.

$$I_{AO} = I_m Sin\omega t + I_{3m}\text{Sin}(3\omega t + \emptyset_3) + I_{5m}\text{Sin}(5\omega t + \emptyset_5) \ldots\ldots equ(1)$$

$$I_{BO} = I_{1m}\,\text{Sin}(\omega t - 120°) + I_{3m}\text{Sin}[3(\omega t - 120°) + \emptyset_3] + I_{5m}\text{Sin}[3(\omega t - 120°) + \emptyset_3]$$

$$I_{BO} = I_{1m}\,\text{Sin}(\omega t - 120°) + I_{3m}\text{Sin}(3\omega t + \emptyset_3) + I_{5m}\text{Sin}(5(\omega t + 120° + \emptyset_5) \ldots\ldots equ(2)$$

$$I_{CO} = I_{1m}\,\text{Sin}(\omega t - 240°) + I_{3m}\text{Sin}[3(\omega t - 240°) + \emptyset_3] + I_{5m}\text{Sin}[3(\omega t - 240°) + \emptyset_3]$$

$$I_{CO} = I_{1m}\,\text{Sin}(\omega t - 240°) + I_{3m}\text{Sin}(3\omega t + \emptyset_3) + I_{5m}\text{Sin}(5(\omega t + 240° + \emptyset_5) \ldots\ldots\ldots\ldots equ(3)$$

It is seen from equation (1), (2), and (3) that the third harmonics in the three currents are co-phase, that is they have the same phase. The fifth harmonics have different phases.

Delta Connection

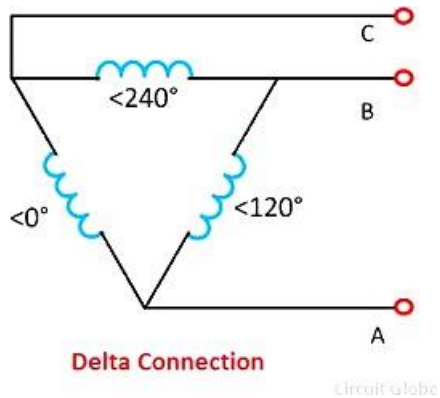

Let the I_{AO}, I_{BO} and the I_{CO} represent the phase magnetising current in a delta connection. The line currents can be found by subtracting two phases current. For examples,

$$I_{ABO} = I_{AO} - I_{BO}$$

$$I_{ABO} = \sqrt{3}I_{1m}Sin(\omega t + 30°) - \sqrt{3}I_{5m}Sin(5\omega t - 30° + \emptyset_5) + \cdots equ(4)$$

The third harmonic present in the phase magnetising current of three phase transformer is not present in the line current. The third harmonic components are co-phase and hence cancel out in the line. The third harmonic components are flows round the closed loop of the delta.

The delta connection only allows a sinusoidal flux and voltage with no third harmonic current in the transmission line. For this reason majority of the 3-phase transformer has delta connected windings and in places where it is not convenient to have an either primary or secondary connected in delta, a tertiary winding is provided. The tertiary windings carry the circulating third harmonics current required by the sinusoidal flux in each limb of the core.

In a delta connection, the voltage acting around the closed delta is,

$$V_A + V_B + V_C = 3V_{3m}\text{Sin}(3\omega t + \emptyset_3') \ldots\ldots equ(11)$$

This is a third harmonic voltage and it will circulate a third harmonic current round the closed loop of the delta

Star connection

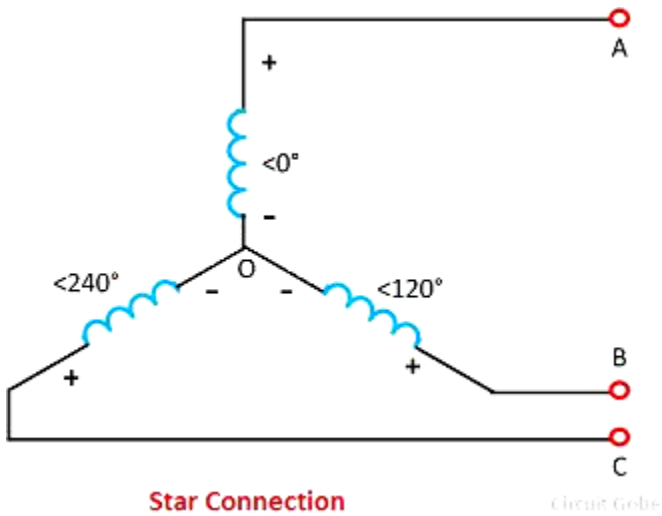

If I_{AO}, I_{BO} and I_{CO}, represents the phase magnetising current in a star connection,

$$I_{AO} + I_{BO} + I_{CO} = I_N \ldots\ldots equ(5)$$

Where I_n is the current in the neutral wire.

$$I_{AO} + I_{BO} + I_{CO} = 3I_{3m}\text{Sin}(3\omega t + \emptyset_3) \ldots\ldots equ(6)$$

The harmonics above the seventh be neglected. The equation (6) shows that under the balanced condition the current flow in the neutral wire is the third harmonic current. The magnitude of the third harmonics current is thrice the magnitude of each third phase current. The thirds harmonic current produced inductive interference with communication circuit. If the supply to the star connection is three wires, neutral current must be zero and therefore

$$3I_{3m}\text{Sin}(3\omega t + \emptyset_3) = 0$$

$$I_{3m} = 0$$

Thus, it is seen that the three wire star connection suppresses the flow of harmonic and magnetising currents. For a four wire star-connected system, the in phase third harmonic current flow in the neutral wire.

Similarly, the third balance phase voltage containing harmonics can be written as

$$V_A = V_{1m}Sin(\omega t + \emptyset_1') + V_{3m}\text{Sin}(3\omega t + \emptyset_3') + V_{5m}\text{Sin}(5\omega t + \emptyset_5') \ldots\ldots equ(7)$$

$$V_B = V_{1m}\,\text{Sin}(\omega t - 120° + \emptyset_1') + V_{3m}\text{Sin}(3\omega t + \emptyset_3') + V_{5m}\text{Sin}(5\omega t + 120° + \emptyset_5') \ldots\ldots equ(8)$$

$$V_C = V_{1m}\,\text{Sin}(\omega t - 240° + \emptyset_1') + V_{3m}\text{Sin}(3\omega t + \emptyset_3') + V_{5m}\text{Sin}(5(\omega t + 240° + \emptyset_5') \ldots\ldots\ldots\ldots equ(9)$$

The equation (7), (8) and (9) shows that the third harmonics in the three phase voltage have the same phase. The line voltage in a star connection can be obtained by subtracting two phase voltages. For example

$$V_{AB} = V_A - V_B$$

$$V_{AB} = \sqrt{3}V_{1m}Sin(\omega t + 30^{\circ} + \emptyset_1') - \sqrt{3}V_{5m}Sin(5\omega t + 30^{\circ} + \emptyset_5') + .. equ(10)$$

From equation (10) it is seen that the third harmonics is not present in the line to line voltage of a star connection. This applies to all triplers harmonics.